Total Teleportation of a Single-photon State

Travis Humble, Ryan Bennink, and Warren Grice
Center for Quantum Information Science
Oak Ridge National Laboratory
Oak Ridge, TN 37831 USA

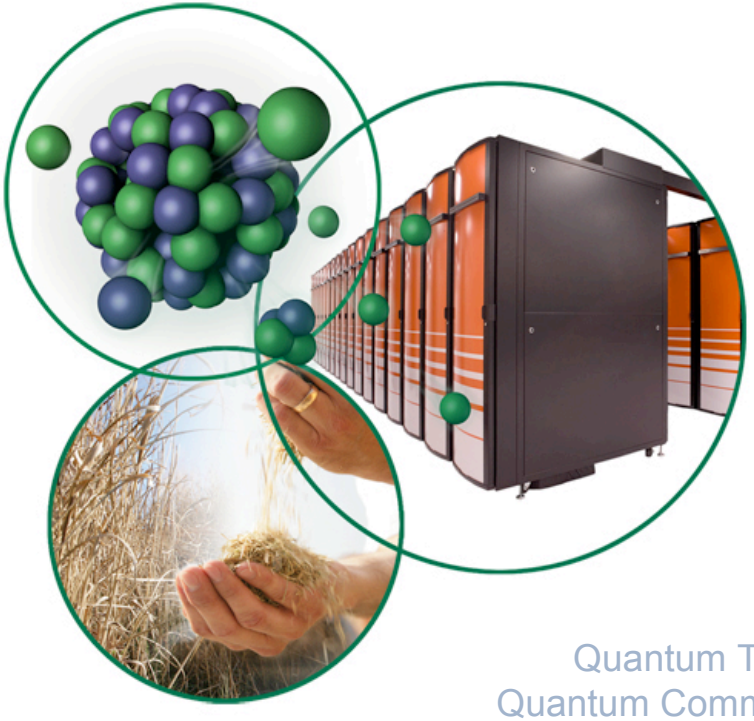

We describe how the spectral, transverse-spatial, and polarization states of a single photon can be simultaneously teleported using a single pair of multimode, polarization-entangled photons derived from spontaneous parametric down-conversion.

Quantum Technologies III, Paper 7092-32
Quantum Communication and Quantum Imaging VI
14 August 2008 SPIE Optics+Photonics, San Diego, CA

Total Teleportation of a Single Photon

Teleporting the full quantum state of a single photon

- Simultaneous teleportation of the spectral, transverse spatial, and polarization components.
- Each degree of freedom encodes quantum information.
- Teleport the complete quantum identity of a particle (photon).

$$\rho \quad \text{vs.} \quad \tilde{\rho} = \mathrm{Tr}\left[\rho\right]$$

- Multimode effects, poor interference and collection efficiencies.
- Filtering is simpler than improving source purity, but does not scale well.

We show how to synthesize piecewise teleportation procedures into a single protocol.

- Walk through spectral teleportation, analyze the limits on fidelity.
- Review implementations for transverse-spatial and polarization QT.
- Describe an experimental setup for demonstrating this idea.

Oak Ridge National Laboratory

Spectral Teleportation: Initial States

Transfer the spectral amplitude of one photon to another

- Encode quantum information into the spectral state of photon 1

$$|\psi_1\rangle = \int \alpha(\omega)|\omega_1\rangle d\omega \qquad \int |\alpha(\omega)|^2 d\omega = 1$$

- Use spectrally entangled photon pair 2,3 to mediate teleportation

$$|\varphi_{23}\rangle = \int d\omega \int d\omega' f(\omega,\omega')|\omega_2,\omega_3'\rangle \qquad \int d\omega \int d\omega' |f(\omega,\omega')|^2 = 1$$

- Quantify spectral entanglement using the Schmidt decomposition of the joint spectral probability amplitude

$$f(\omega,\omega') = \sum_{n=0}^{\infty} \lambda_n^{1/2} u_n(\omega) v_n(\omega')$$

$$K = \frac{\sum \lambda_n}{\sum \lambda_n^2}$$

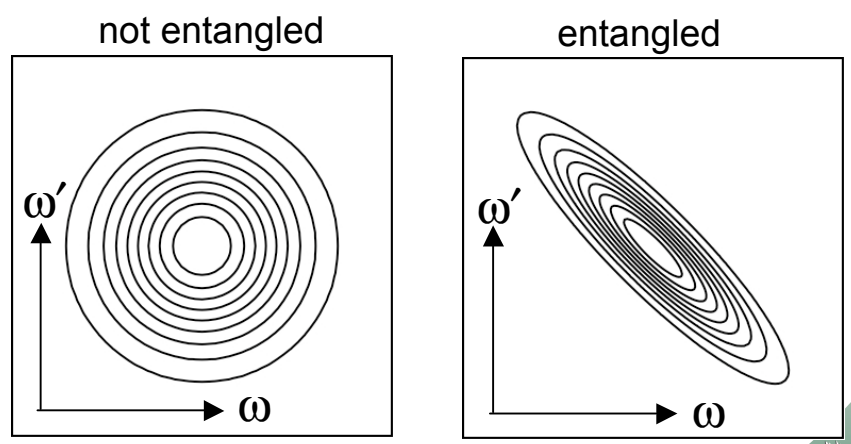

Spectral Teleportation: Up Conversion

Procedure:

- Up convert photons 1 and 2 (SFG) to generate photon 4.
- Measure photon 4 with respect to frequency Ω.
- Correct for measurement uncertainty

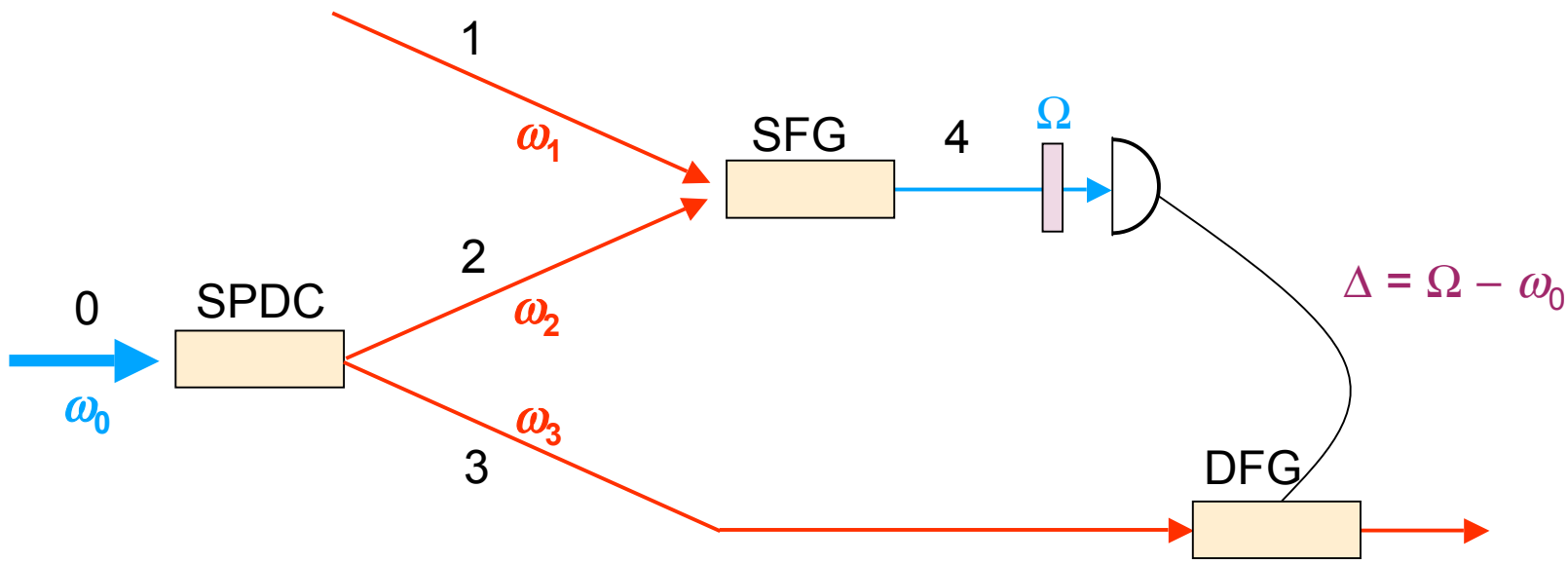

$$|\chi_3\rangle = \eta \int d\omega \int d\omega' \alpha(\omega) f(\Omega - \omega, \omega' - \Delta) |\omega_3'\rangle$$

Spectral Teleportation: Example I

In the limit of a c-w pump

- Infinitely entangled joint spectral amplitude

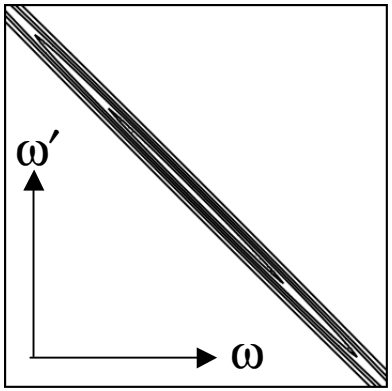

$$f(\omega,\omega') \rightarrow \delta(\omega_0 - \omega - \omega')$$

$$|\chi_3\rangle = \int \alpha(\omega) |(\omega + \Delta)_3\rangle d\omega \qquad \Delta = \Omega - \omega_0$$

- Shift spectral state using difference frequency generation (DFG)

$$|\chi_3\rangle = \int \alpha(\omega) |\omega_3\rangle d\omega$$

Fidelity $F \equiv \langle \psi_1 | \chi_3 \rangle = 1$

Two things to note for this case

- Spectral entanglement is infinite, $K \rightarrow \infty$
- Bandwidth of photons 2 and 3 are much greater than photon 1

Spectral Teleportation: Example II

Gaussian joint spectral amplitude

- Marginal bandwidths (Mean frequencies)

$$\sigma_2, \sigma_3 \quad (\omega_2, \omega_3)$$

- Linear correlation

$$\rho = \tanh \varphi$$

- Spectral Schmidt number

$$K = \cosh 2\varphi$$

- Gaussian input state

$$\alpha(\omega) = \left(\pi\sigma_1^2\right)^{-1/4} \exp\left[-(\omega - \omega_1)^2 / 2\sigma_1^2\right]$$

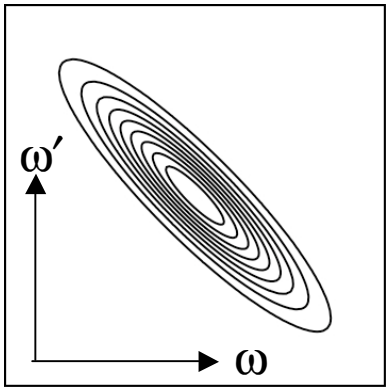

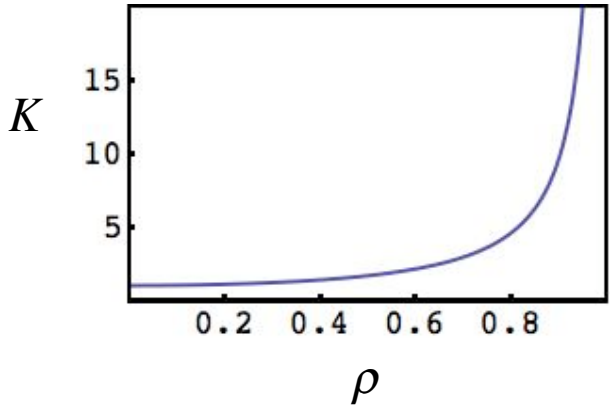

Spectral Teleportation Fidelity: Plot I

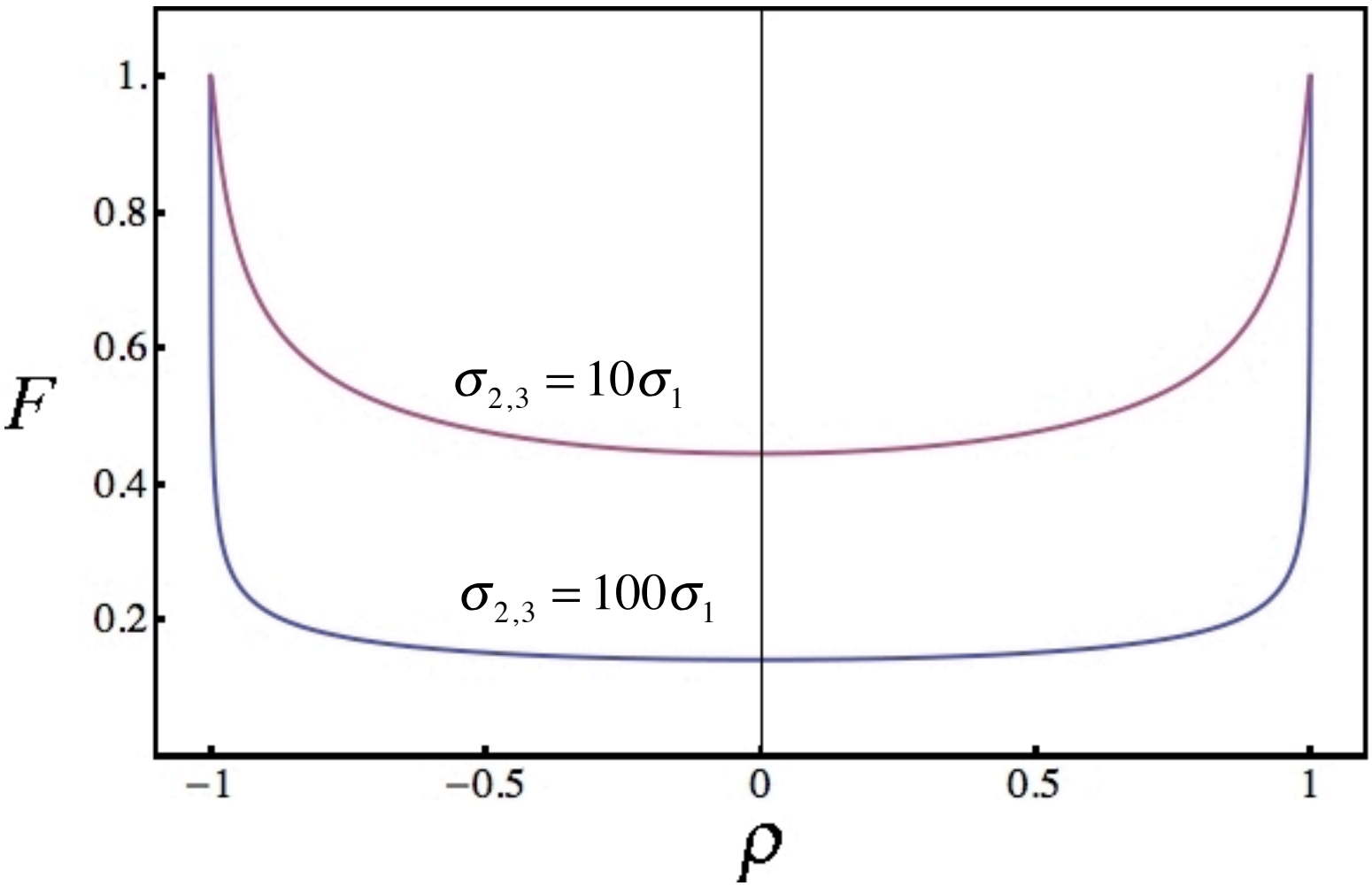

Spectral Teleportation Fidelity: Plot II

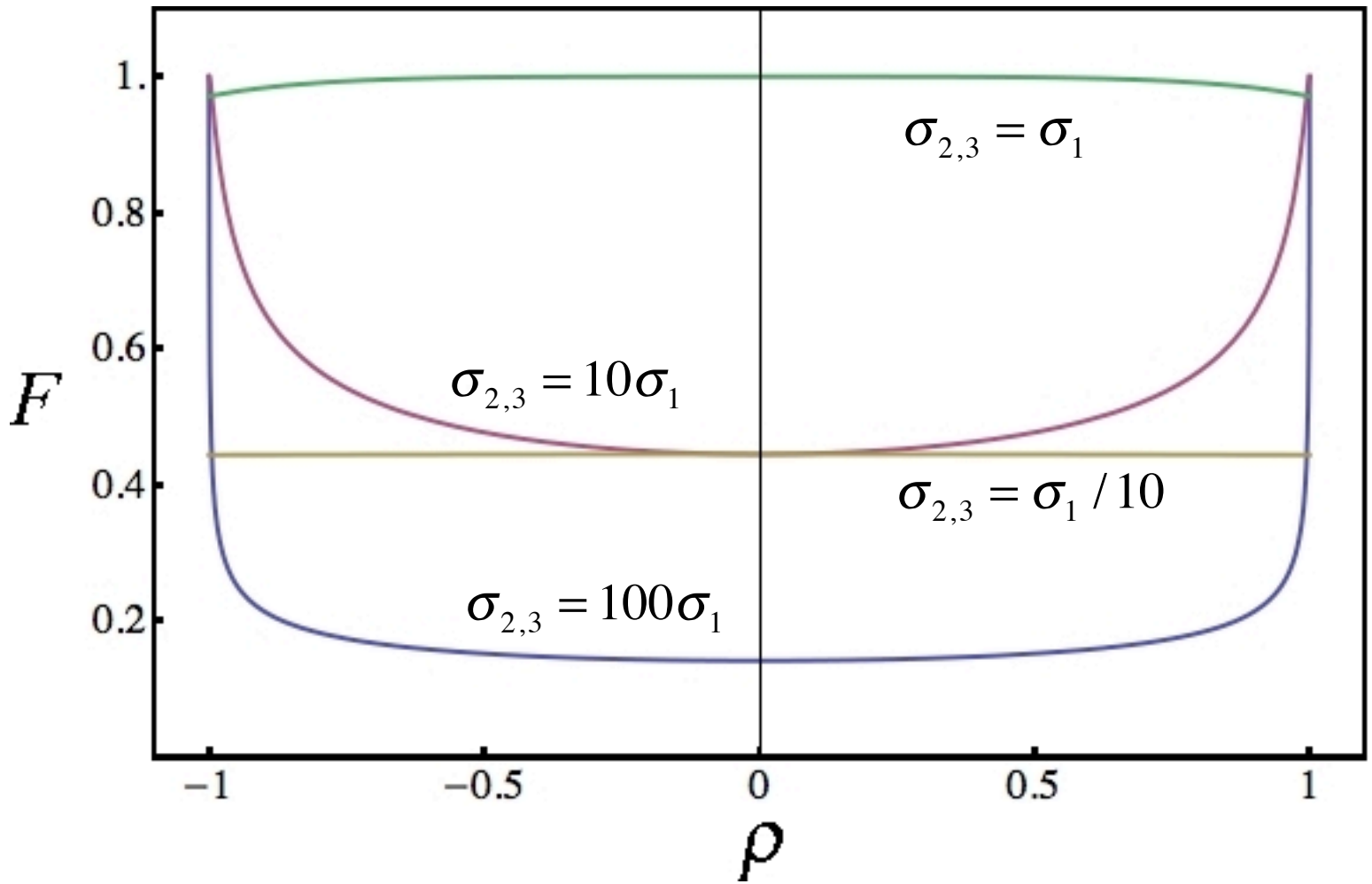

Transverse-Spatial Teleportation

S. P. Walborn, D. S. Ether, R. L. de Matos Filho, and N. Zagury, "Quantum teleportation of the angular spectrum of a single-photon field", Phys. Rev. A **76**, 033801 (2007).

- Encode information into the angular spectrum of photon 1
- Use spatially entangled photon pair 2 and 3 to mediate teleportation

$$|\psi_1\rangle = \int u(\mathbf{q})|\mathbf{q}_1\rangle d\mathbf{q} \qquad |\varphi_{23}\rangle = \int d\mathbf{q}\int d\mathbf{q}'\vartheta(\mathbf{q},\mathbf{q}')|\mathbf{q}_2,\mathbf{q}'_3\rangle$$

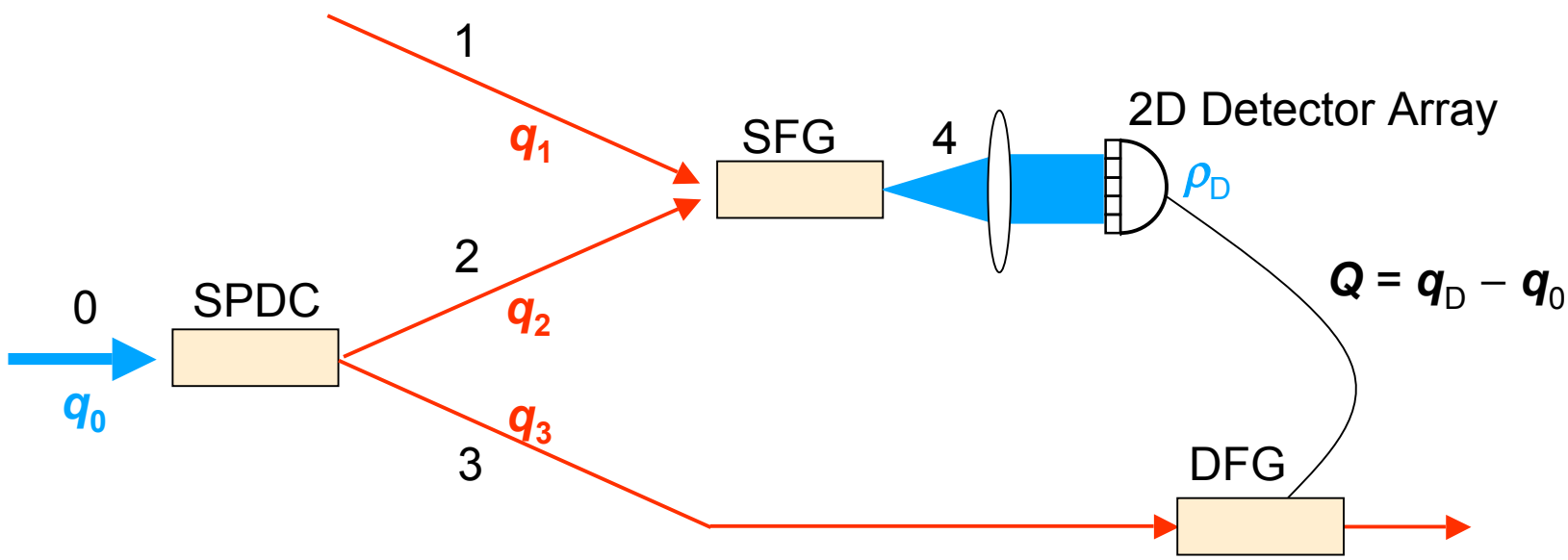

Polarization Teleportation

Y.-H. Kim, S. P. Kulik, and Y. Shih, "Quantum teleportation of a polarization state with a complete Bell state measurement," Phys. Rev. Lett. **86**, 1370-1373 (2001).

- A complete Bell-state measurement using nonlinear optics.
- Type-I and type-II SFG differentiates between the Bell states.

$$|\psi_1\rangle = a|H_1\rangle + b|V_1\rangle \qquad |\varphi_{23}\rangle = \frac{1}{\sqrt{2}}\left(|H_2, V_3\rangle + |V_2, H_3\rangle\right)$$

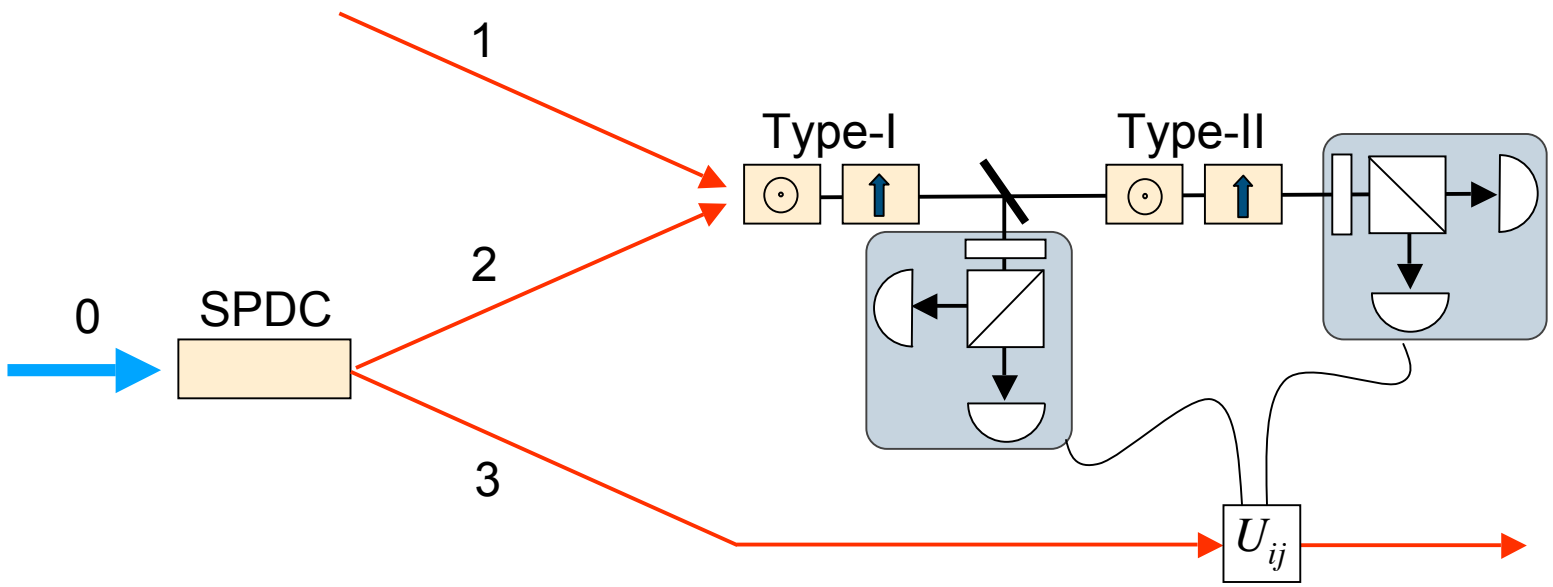

Total Teleportation: A Setup

All three 'pieces' depend on a common factor, up conversion (SFG).

- Overlay spectral, transverse-spatial, and polarization teleportation setups.
- A single SFG event will initiate all three teleportation procedures.
- The frequency, momentum, and polarization of photon 4 will be measured.

$$|\psi_1\rangle = \int d\omega \int d\mathbf{q} \left\{ A(\omega,\mathbf{q}) \left| H_1(\omega,\mathbf{q}_1) \right\rangle + B(\omega,\mathbf{q}) \left| V_1(\omega,\mathbf{q}_1) \right\rangle \right\}$$

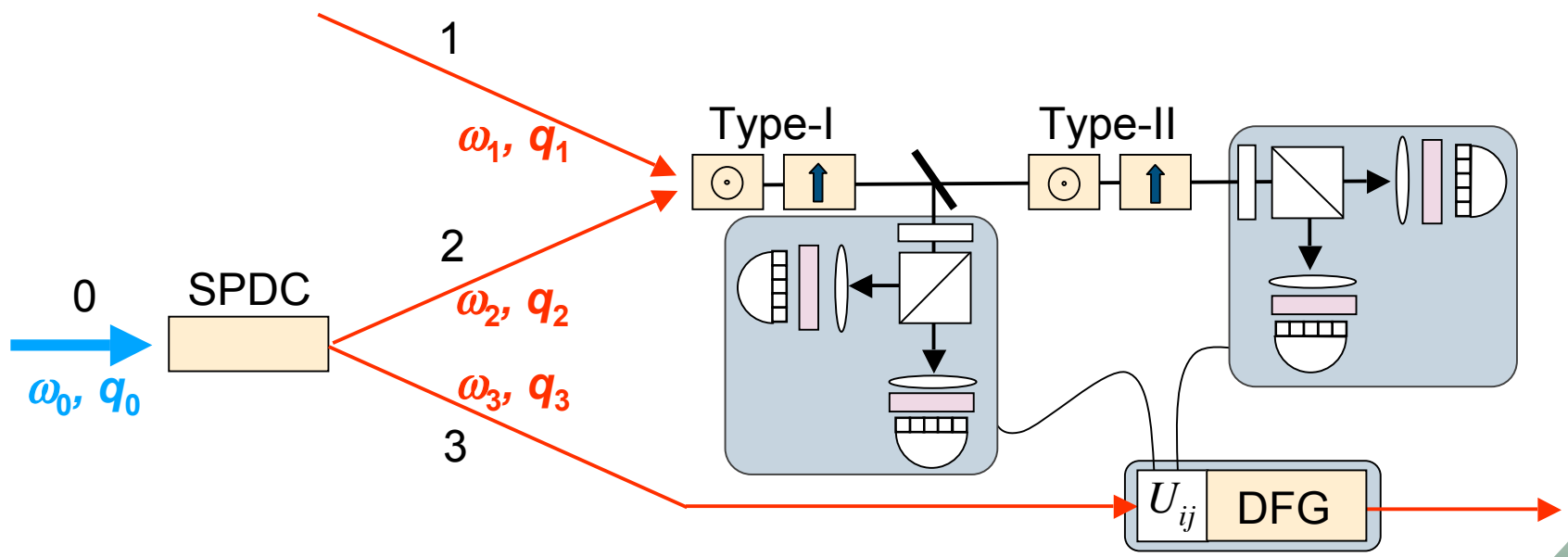

Total Teleportation of a Single-photon State

Summary

- We have advocated the idea of simultaneous teleportation of the spectral, transverse-spatial, and polarization states of a single photon.
- We have presented a procedure for performing spectral teleportation that uses up conversion of a photon pair.
- We have incorporated previous schemes for teleportation of polarization and transverse spatial quantum states.
- We have synthesized these three schemes together to form a single procedure for implementing total teleportation.
- We expect simultaneous teleportation of multiple d.o.f. to further expand the alphabets accessible for photon-based quantum communications.
- Paper 7092-32, “Total teleportation of a single-photon state”

Travis Humble
Center for Quantum Information Science
Oak Ridge National Laboratory
Oak Ridge, TN 37831 USA

OAK RIDGE National Laboratory