Simultaneous Teleportation of Multiple Photonic Degrees of Freedom

Travis Humble, Ryan Bennink, and Warren Grice
Oak Ridge National Laboratory
Oak Ridge, TN 37831 USA

We report how quantum information encoded into multiple photonic degrees of freedom may be simultaneously teleported using a single, common physical platform.

Single Photon Workshop at NIST
4 November 2009 Boulder, CO

Teleportation of a Single-Photon State

The status quo is teleporting a single degree of freedom, e.g., polarization.

But consider teleportation of the complete quantum state, i.e., simultaneous teleportation of spectral, angular, and polarization states.

- Each degree of freedom encodes quantum information;
- The complete 'identity' of the photon is teleported, not a reduced representation;

$$\rho \quad \text{vs.} \quad \tilde{\rho}_{\text{pol.}} = \text{Tr}_{\text{spec.,spat.}}\left[\rho\right]$$

- All modes are teleported, side steps poor interference from multimode effects;
- Every photon is a good photon, side steps filtering to improve source purity.

How? Synthesize individual teleportation procedures into a single protocol that simultaneously teleports each degree of freedom.

- Spectral, transverse-spatial (momentum), and polarization procedures.
- Simultaneous teleportation requires hyper-entanglement in these dofs.
- A common platform is two-photon up-conversion; may be alternatives.

OAK RIDGE National Laboratory

Spectral Teleportation

Transfer the spectral amplitude of one photon to another photon.

- Encode quantum information into the spectral state of photon 1

$$|\psi_1\rangle = \int \alpha(\omega)|\omega_1\rangle d\omega \qquad \int |\alpha(\omega)|^2 d\omega = 1$$

- Use a spectrally entangled photon pair (2, 3) to mediate teleportation

$$|\varphi_{23}\rangle = \int d\omega \int d\omega' f(\omega,\omega')|\omega_2,\omega_3'\rangle \qquad \int d\omega \int d\omega' |f(\omega,\omega')|^2 = 1$$

- Spectral entanglement is quantified using the Schmidt decomposition of the joint spectral probability amplitude

$$f(\omega,\omega') = \sum_{n=0}^{\infty} \lambda_n^{1/2} u_n(\omega) v_n(\omega')$$

$$K = \left(\sum \lambda_n\right)^2 \Big/ \sum \lambda_n^2$$

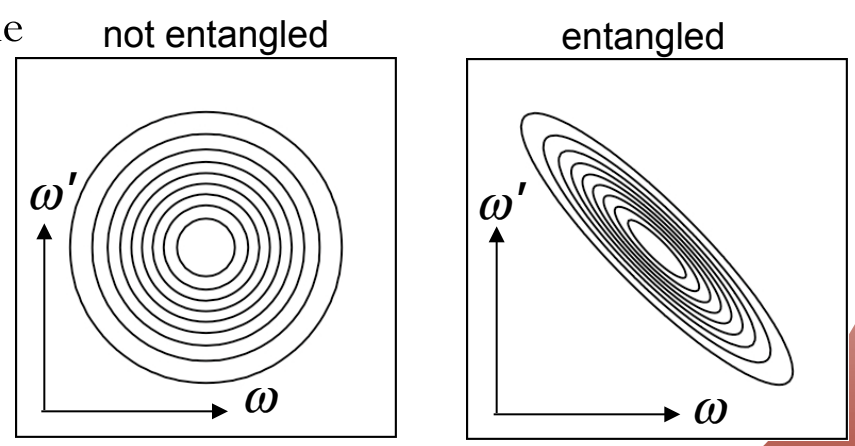

Spectral Teleportation

Implemented using down-conversion followed by up-conversion

- Prepare state of photon 1, prepare spectrally entangled pair 2-3 using SPDC.
- Up-convert photons 1 and 2 to generate photon 4, e.g., using SFG.
- Measure up-converted photon w.r.t frequency, i.e., spectral resolution at the detector.
- Apply measurement-dependent spectral shift Δ, e.g., using an AOM.

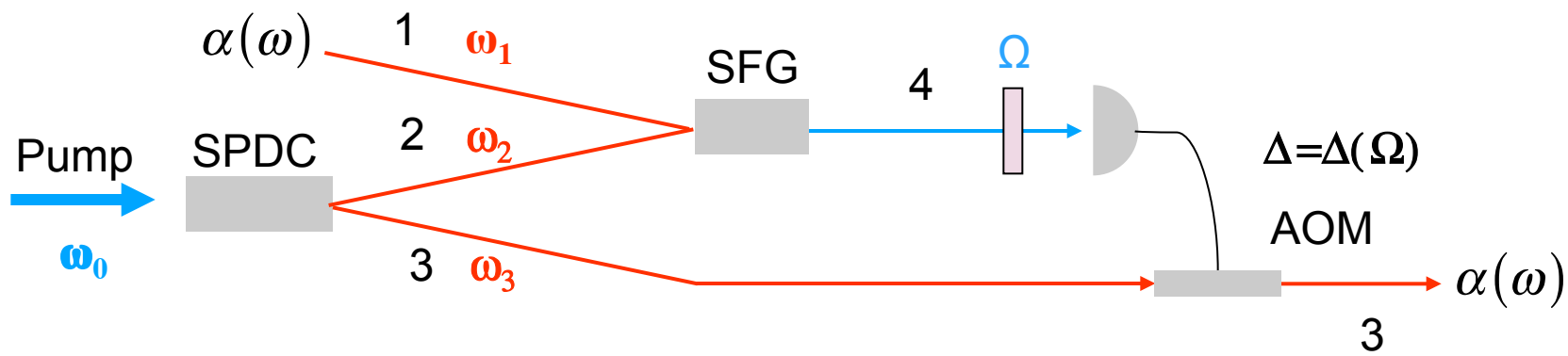

- Spectral state of photon 3 after spectral teleportation

$$|\psi_3\rangle = \eta \int d\omega \int d\omega' \alpha(\omega) f(\Omega - \omega, \omega' - \Delta) |\omega_3'\rangle$$

Spectral Teleportation with a cw-pump

For a monochromatic pump at ω_0,

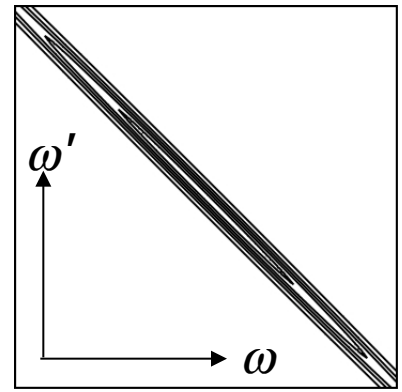

- Joint spectral amplitude is infinitely entangled

$$f(\omega,\omega') \rightarrow \delta(\omega_0 - \omega - \omega') \qquad K \rightarrow \infty$$

- State of photon 3 prior to spectral shift

$$|\tilde{\psi}_3\rangle = \int \alpha(\omega) |(\omega + \Delta)_3\rangle d\omega \qquad \Delta = \Omega - \omega_0$$

$$(\Omega \approx \omega_0 \text{ and } \Delta \approx 0)$$

- Apply spectral shift, e.g., using acoustic optic modulator driven at Δ

$$|\psi_3\rangle = \int \alpha(\omega) |\omega_3\rangle d\omega \qquad F \equiv \langle \psi_1 | \psi_3 \rangle = 1$$

Transverse-spatial (momentum) Teleportation

See S. P. Walborn, D. S. Ether, R. L. de Matos Filho, and N. Zagury, "Quantum teleportation of the angular spectrum of a single-photon field", Phys. Rev. A **76**, 033801 (2007).

How does it work?

- Prepare angular spectrum of photon 1, spatially entangled photons 2 and 3;

$$|\psi_1\rangle = \int u(\mathbf{q})|\mathbf{q}_1\rangle d\mathbf{q} \qquad |\varphi_{23}\rangle = \int d\mathbf{q}\int d\mathbf{q}'\vartheta(\mathbf{q},\mathbf{q}')|\mathbf{q}_2,\mathbf{q}_3'\rangle$$

- Up-convert photon 1 and 2 into photon 4, measure with spatial resolution.

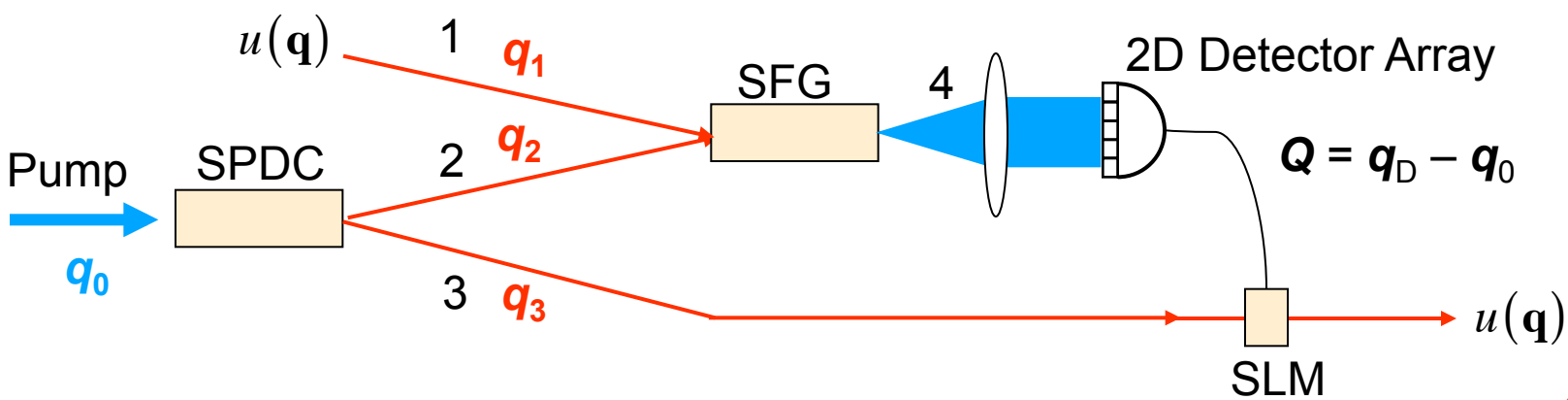

Polarization Teleportation

See Y.-H. Kim, S. P. Kulik, and Y. Shih,
"Quantum teleportation of a polarization state with a complete Bell state measurement,"
Phys. Rev. Lett. **86**, 1370-1373 (2001).

- A complete Bell-state measurement using nonlinear optics;
- Type-I and type-II SFG (up-conversion) differentiates between the Bell states.

$$|\psi_1\rangle = a|H_1\rangle + b|V_1\rangle \qquad |\varphi_{23}\rangle = \frac{1}{\sqrt{2}}\left(|H_2, V_3\rangle + |V_2, H_3\rangle\right)$$

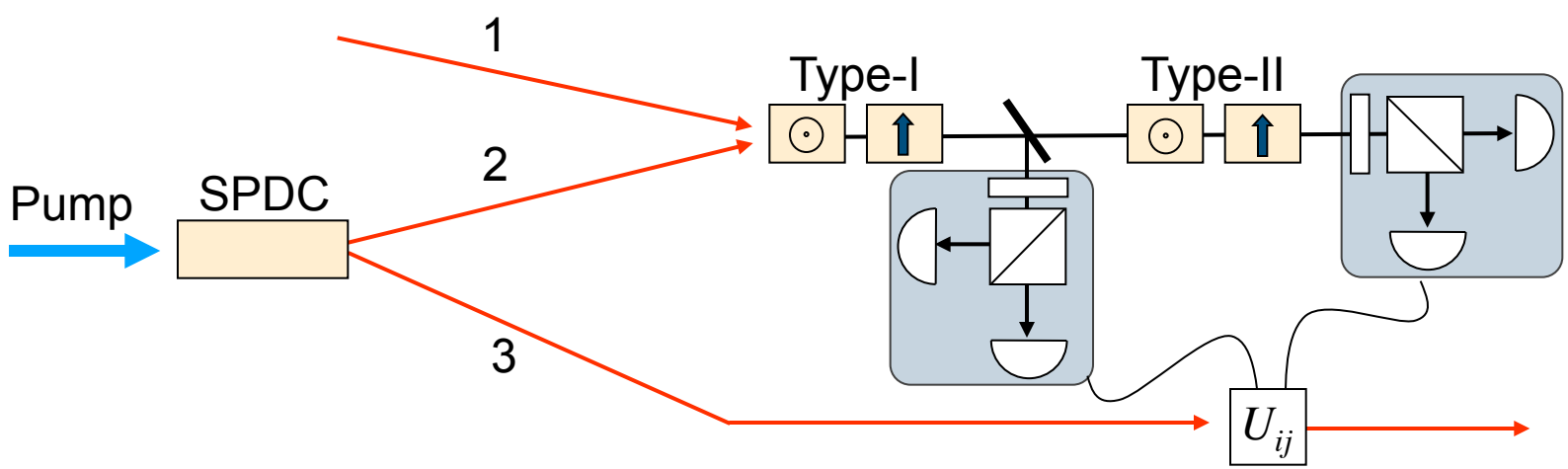

Simultaneous Teleportation

Integrate all three 'pieces'; integration based on up-conversion.

- Overlay spectral, transverse-spatial, and polarization teleportation setups;
- A single SFG event initiates all three teleportation procedures;
- The frequency, momentum, and polarization of the up-converted photon will be measured.

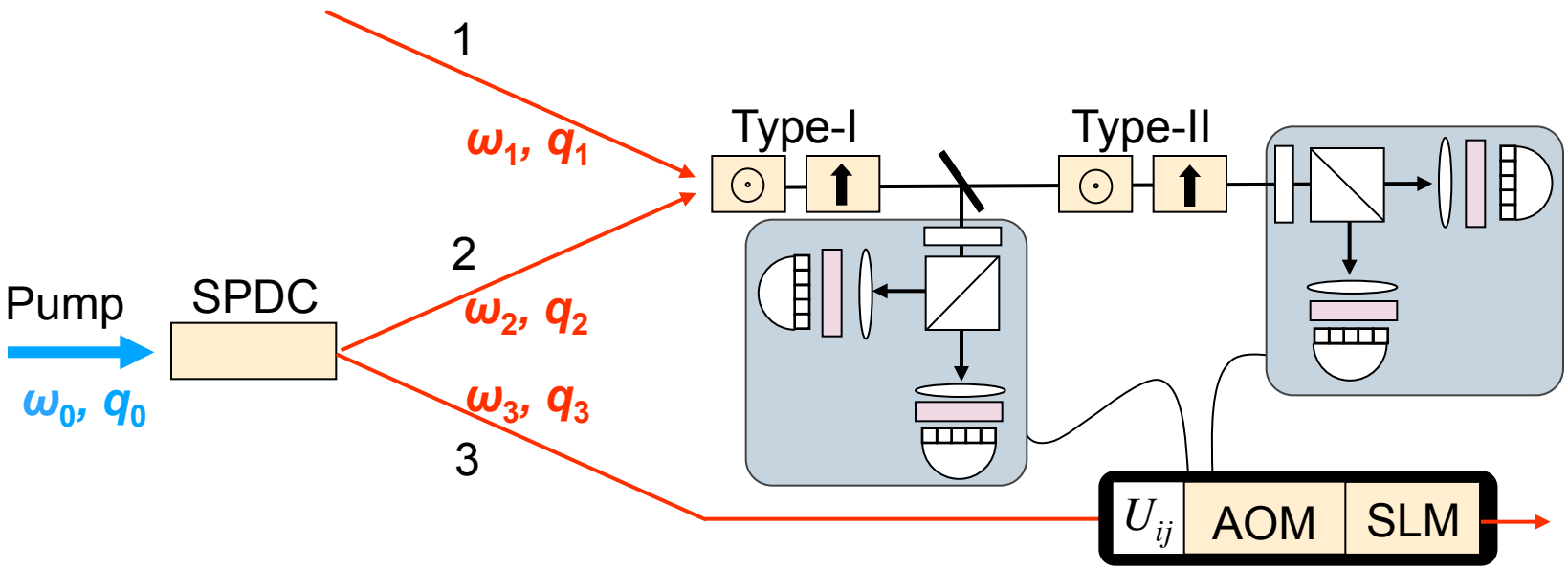

Simultaneous Teleportation Fidelity

For separable states

- When the input state and hyper-entangled state are both separable in the physical degrees of freedom, e.g.,

$$\left|\psi_1\right\rangle = \left|\psi_1^{\text{spec}}\right\rangle \otimes \left|\psi_1^{\text{spat}}\right\rangle \otimes \left|\psi_1^{\text{pol}}\right\rangle \qquad \left|\varphi_{23}\right\rangle = \left|\varphi_{23}^{\text{spec}}\right\rangle \otimes \left|\varphi_{23}^{\text{spat}}\right\rangle \otimes \left|\varphi_{23}^{\text{pol}}\right\rangle$$

  then the total fidelity is the product of the component fidelities:

$$F_{\text{total}} = F_{\text{spec}} F_{\text{spat}} F_{\text{pol.}}$$

  Hence very high component fidelities are needed to get high total fidelity. Alternatively, good spectral teleportation does not need good polarization teleportation.

For cross-correlated states

- When the input state or the hyper-entangled state are cross-correlated in degrees of freedom, e.g., as entanglement between frequency and polarization, then the fidelity must be computed using that conjoined Hilbert space.

- Open questions: Can cross-correlated hyper-entanglemed states mediate teleportation fidelities as good or better than their separable counterparts? Does it depend on the input state?

Oak Ridge National Laboratory

Simultaneous Teleportation

Why?

- To use more Hilbert space – it's already there, so we might as well use it;
- To encode more information per photon – increase information capacities;
- To relay or distribute large alphabet QKD symbols;
- To perform hyper-entanglement swapping;
- To teleport more than one qubit in only one photon
  - like in an intermediate quantum computational state

$$\left|\psi_1\right\rangle \neq \left|\psi_1^{\text{spec.}}\right\rangle\left|\psi_1^{\text{spat.}}\right\rangle\left|\psi_1^{\text{pol.}}\right\rangle$$

Oak Ridge National Laboratory

Simultaneous Teleportation of Multiple Photonic Degrees of Freedom

Summary

- We have proposed the idea of simultaneous teleportation of the spectral, transverse-spatial, and polarization states of a single photon.
- We have presented a procedure for performing spectral teleportation that uses up conversion of a photon pair.
- We have incorporated previous schemes for teleportation of polarization and transverse-spatial states.
- We have synthesized these three schemes together to form a single procedure for implementing total teleportation.
- We expect simultaneous teleportation of multiple dofs to further expand the alphabets accessible for photon-based quantum communications and computation.

Travis Humble, Ryan Bennink, and Warren Grice
Oak Ridge National Laboratory
Oak Ridge, TN 37831 USA

OAK RIDGE National Laboratory