Total teleportation of a single-photon state

Travis S. Humble[1], Ryan S. Bennink, and Warren P. Grice
Oak Ridge National Laboratory, Oak Ridge, Tennessee 37831

ABSTRACT

Recent demonstrations of teleportation have transferred quantum information encoded into either polarization or field-quadrature degrees of freedom (DOFs), but an outstanding question is how to simultaneously teleport quantum information encoded into multiple DOFs. We describe how the transverse-spatial, spectral and polarization states of a single photon can be simultaneously teleported using a pair of multimode, polarization-entangled photons derived from spontaneous parametric down-conversion. Furthermore, when the initial photon pair is maximally entangled in the spatial, spectral, and polarization DOFs then the photon's full quantum state can be reliably teleported using a Bell-state measurement based on sum-frequency generation.

Keywords (10 max): Quantum teleportation, quantum optics, Bell-state measurement, quantum entanglement

1. INTRODUCTION

1.1 Quantum teleportation protocol

The quantum teleportation protocol (QTP) is a uniquely quantum-mechanical method for transferring information between two spatially separated parties.[1] The QTP requires the presence of a quantum communication channel (entanglement) to transmit quantum information and a classical communication channel to correct for the accompanying quantum measurement uncertainty. In the logical basis $\{|0\rangle, |1\rangle\}$, an arbitrary qubit encoded into particle 1 is specified by

$$|\psi_1\rangle = a|0_1\rangle + b|1_1\rangle, \tag{1}$$

where $|a|^2+|b|^2=1$ and the subscripts denote the corresponding particle label. In the QTP, particles 2 and 3 are prepared in one of the four maximally entangled Bell states, i.e.,

$$|\Psi_{23}^{\pm}\rangle = \frac{1}{\sqrt{2}}\left(|0_2,1_3\rangle \pm |0_2,1_3\rangle\right) \quad \text{and} \quad |\Phi_{23}^{\pm}\rangle = \frac{1}{\sqrt{2}}\left(|0_2,0_3\rangle \pm |1_2,1_3\rangle\right). \tag{2}$$

Quantum teleportation operates on the composite state of the three particles by projecting particles 1 and 2 into one of four Bell states. This projective measurement subsequently leads to one of four possible states for particle 3, i.e.,

$$\begin{aligned} &\text{(a) } a|0_3\rangle + b|1_3\rangle \qquad &&\text{(b) } b|0_3\rangle + a|1_3\rangle \\ &\text{(c) } b|0_3\rangle - a|1_3\rangle \qquad &&\text{(d) } a|0_3\rangle - b|1_3\rangle. \end{aligned} \tag{3}$$

In order to complete teleportation of the qubit in Eq. (1), the classical information identifying the measurement outcome is relayed to the location of particle 3 so that an appropriate local unitary operation can be applied to correct for the quantum measurement uncertainty. Two bits of classical information suffice to distinguish between the four possible outcomes. (The local unitary operations consist of (a) the identity operator I and the Pauli operators (b) σ_X, (c) $i\sigma_Y$, and (d) σ_Z.)

1.2 Experimental Quantum Teleportation

The formulation of the QTP outlined above has been realized experimentally using various atomic[2] and photonic[3] systems. In the case of photonic systems, several different degrees of freedom (DOFs) have been used for encoding quantum information, including the case that the logical basis is the polarization components of a single photon, e.g., $|0\rangle \rightarrow |H\rangle$ and $|1\rangle \rightarrow |V\rangle$. This specific encoding is often used in photonic studies of quantum teleportation because of the relative ease with which the polarization degree of freedom can be manipulated (using linear optics) and because a

[1] Corresponding author: humblets@ornl.gov

Quantum Communications and Quantum Imaging VI, edited by Ronald E. Meyers, Yanhua Shih,
Keith S. Deacon, Proc. of SPIE Vol. 7092, 70920V, (2008) · 0277-786X/08/$18 · doi: 10.1117/12.795091

means for generating polarization-entangled photon pairs is readily available through the nonlinear optical process of spontaneous parametric down-conversion (SPDC). In particular, the generation of polarization-based analogs of the Bell states can be realized, e.g., using a type-I SPDC twin-crystal configuration or a type-II SPDC cross-beam configuration, while the Bell-state measurement that underlies teleportation can be implemented in several different ways (this point is discussed in Sec. 2.3).

Experimentally, polarization-encoded QTP has lead to very high teleportation fidelities (a measure of how accurately the teleported state resembles the initial qubit). Bouwmeester *et al.* were the first to demonstrate experimental quantum teleportation using polarization-encoded qubits and they obtained a fidelity of 0.70±0.03 (including accidentals),[3] while in the work of Kim *et al.*, polarization-encoded qubits were teleported with a fidelity of 0.83.[4] Subsequently, Jennewein *et al.* performed a linear optic variant of teleportation on an initially entangled photon with a fidelity of 0.92 (excluding accidentals).[5]

Notably, these experimental demonstrations have not teleported the *total* quantum state of a photon, but rather that component of the photonic state that encodes a single qubit, i.e., a state of the polarization subspace that belongs to the larger Hilbert space of the photon. That is to say, these prior experiments have disregarded the spectral and transverse-spatial states of the photon, which are treated as non-information carrying DOFs. To wit, it is common in these experimental realizations for the spectral and spatial modes of the interfering photons to be strongly filtered, e.g., using narrow-bandwidth spectral filters and single-mode collection fibers, respectively.

The use of spectral and spatial filtering has proven experimentally beneficial for achieving high fidelities in polarization-encoded teleportation because the non-information carrying DOFs have often served to distinguish the photons and, consequently, degrade the entanglement between them.[6] Filtering the spectral and spatial states selects only those photons that are in (nearly) single spectral and spatial modes, for which the polarization encoding approaches the theoretical ideal of indistinguishable qubits.

The success of these arrangements notwithstanding, we are motivated to ask whether the total quantum state of a single photon, i.e., the polarization, spectral, and transverse-spatial probability amplitudes, can be teleported. If so, may it then also prove possible to treat the spectral and spatial DOFs as information carriers that stand on equal ground with the polarization? As we report below, total teleportation of a single-photon state can be accomplished when sufficient entanglement exists in all three photonic DOFs. We propose an experimentally feasible scheme for implementing the idea of total teleportation, and we describe the conditions under which unit fidelity can be achieved.

2. TOTAL TELEPORTATION

2.1 Spectral teleportation

We first describe our proposal for teleporting the spectral state

$$|\psi_1\rangle = \int \alpha(\omega)|\omega_1\rangle d\omega, \tag{4}$$

where the complex-valued function $\alpha(\omega)$ is normalized to unity and $|\omega_1\rangle$ is the state in which photon 1 has frequency ω. In subsequent sections, we combine the idea of spectral teleportation with existing techniques for teleporting the transverse-spatial and polarization states. The quantum channel used for teleporting the spectral state (4) is a pair of spectrally entangled photons 2 and 3 in the normalized state

$$|\varphi_{23}\rangle = \int d\omega \int d\omega' f(\omega,\omega')|\omega_2,\omega_3'\rangle, \tag{5}$$

where the joint spectral amplitude $f(\omega,\omega')$ is the probability amplitude of photon 2 with frequency ω and photon 3 with frequency ω', and the tensor product state $|\omega_2, \omega'_3\rangle = |\omega_2\rangle\otimes|\omega'_3\rangle$ is the corresponding biphoton state. The joint spectral amplitude is characterized using the Schmidt decomposition of $f(\omega,\omega')$,[7], [8] i.e.,

$$f(\omega,\omega') = \sum_{n=0}^{\infty} \lambda_n^{1/2} u_n(\omega) v_n(\omega'), \tag{6}$$

where the nth Schmidt coefficient $\lambda_n \geq 0$ measures the relative population of the nth pair of Schmidt modes $u_n(\omega)$ and $v_n(\omega')$ for photons 2 and 3, respectively. Normalization implies that the Schmidt coefficients sum to unity, i.e., $\Sigma_n \lambda_n=1$, while the Schmidt modes form a complete biorthonormal basis for expanding the joint spectral amplitude that satisfy

$$\int u_m(\omega)u_n(\omega)^* d\omega = \delta_{mn} \quad \text{and} \quad \int v_m(\omega')v_n(\omega')^* d\omega' = \delta_{mn}. \tag{7}$$

Inseparability of the joint spectral amplitude, i.e., the spectral entanglement, can be measured using the Schmidt number

$$K = \left(\Sigma_n \lambda_n^2\right)^{-1}, \tag{8}$$

where a Schmidt number greater than unity indicates that the expansion in Eq. (6) contains more than a single term and, therefore, the spectral states of photons 2 and 3 are entangled. Alternatively, we can measure the spectral entanglement using the von Neumann entropy of the single-photon density matrices corresponding to Eq. (5), i.e.,

$$S = -\mathrm{Tr}\left[\rho_2 \log_2 \rho_2\right] = -\mathrm{Tr}\left[\rho_3 \log_2 \rho_3\right] = -\sum_n \lambda_n \log_2 \lambda_n, \tag{9}$$

where

$$\rho_j = \int d\omega \int d\omega' \rho_j(\omega,\omega') \left|\omega_j\right\rangle\left\langle\omega'_j\right| \qquad (j = 2, 3) \tag{10}$$

with the kernel for photon 2 defined as

$$\rho_2(\omega,\omega') = \int f(\omega,\omega'')f(\omega',\omega'')^* d\omega'' = \sum_n \lambda_n u_n(\omega)u_n(\omega')^*, \tag{11}$$

and a similar expression holds for photon 3.

The physical basis for our formulation of the QTP using spectral information is the up-conversion of photons 1 and 2, e.g., sum-frequency generation (SFG). The effect of up-conversion is to entangle the frequencies of photons 1 and 2 by adding them together. A schematic of the implementation is shown in Fig. 1, where photons 1 and 2 are both incident on a nonlinear optical crystal in which they combine into a higher-energy photon 4. As a result, this transformation takes the initial triphoton state into a biphoton state, i.e.,

$$\left|\psi_1\right\rangle\left|\varphi_{23}\right\rangle \rightarrow \left|\chi_{34}\right\rangle = c\int d\omega \int d\omega' \int d\omega'' \alpha(\omega) f(\omega',\omega'') \left|\omega''_3, (\omega+\omega')_4\right\rangle, \tag{12}$$

where the constant c ensures normalization.

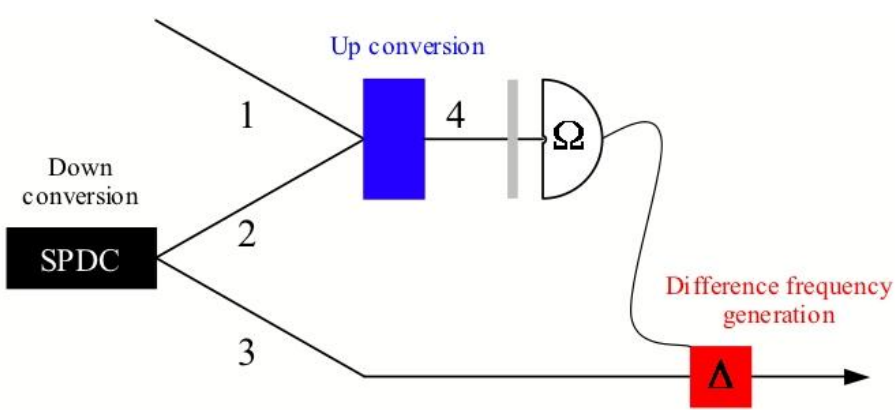

Fig. 1. A physical implementation of the spectral teleportation of photon 1 that uses a pair of spectrally entangled photons from an SPDC source (photons 2 and 3) and that up-converts photons 1 and 2 into photon 4, where the latter is detected to have frequency Ω, e.g., using a narrow bandwidth spectral filter. This classical measurement information provides knowledge about the spectral shift $\Delta=\Omega-2\omega_0$ (with $2\omega_0$ the mean frequency of the SPDC pump field) that is subsequently used to correct the spectral state of photon 3.

In general, the probability for up-conversion (SFG) to occur is small, especially when only a pair of photons are involved. The mechanism, however, motivates the idea of the following teleportation protocol. Specifically, photon 4 is subjected to a spectrally-resolved projective measurement onto the spectral state $|\Omega_4\rangle$, where Ω is the detected frequency. As shown below, the classical measurement information Ω is required by the recipient of photon 3 in order to recover the intended state. This measurement implies that the state of photon 3 is

$$\langle\Omega_4|\chi_{34}\rangle \rightarrow |\tilde{\psi}_3\rangle = \eta\int d\omega\int d\omega'\alpha(\omega)f(\Omega-\omega,\omega')|\omega_3'\rangle. \tag{13}$$

where the norm of this state is

$$\eta^{-2} = \int d\omega\int d\omega'\alpha(\omega)\rho_2(\Omega-\omega,\Omega-\omega')\alpha(\omega')^*. \tag{14}$$

Continuing the analysis, we consider that an initially entangled photon pair (2, 3) generated by broad-bandwidth pumping of SPDC, for which a general form of the joint spectral amplitude is[9]

$$f(\omega,\omega') = A(\omega+\omega')\Phi(\omega,\omega'), \tag{15}$$

where $A(\omega)$ is the spectrum of the pump pulse and the phase-matching function is

$$\Phi(\omega,\omega') = \frac{L}{2}\operatorname{sinc}\left[\Delta k(\omega,\omega')\frac{L}{2}\right]. \tag{16}$$

The length of the SPDC crystal is L (the transverse dimensions being much larger than the beam waist), and the wave-vector mismatch (for collinear down-conversion) is determined by

$$\Delta k(\omega,\omega') = k_p(\omega+\omega') - k_2(\omega) - k_3(\omega'), \tag{17}$$

where the wave vector magnitudes of the pump pulse, photon 2 (signal), and photon 3 (idler) are $k_p(\omega)$, $k_2(\omega)$, and $k_3(\omega)$, respectively. By substituting Eq. (15) into Eq. (13), the state of photon 3 becomes

$$|\tilde{\psi}_3\rangle = \eta\int d\omega\int d\omega'\alpha(\omega)A(\Omega-\omega+\omega')\Phi(\Omega-\omega,\omega')|\omega_3'\rangle. \tag{18}$$

For a cw-pump pulse of frequency $2\omega_0$, the pump spectrum is $A(\omega+\omega') = \delta(2\omega_0-\omega-\omega')$ and Eq. (18) simplifies to

$$|\tilde{\psi}_3\rangle = \eta\int \alpha(\omega)\Phi(\Omega-\omega,\omega-\Delta)|(\omega-\Delta)_3\rangle \tag{19}$$

with $\Delta = \Omega - 2\omega_0$ the difference between the up-converted frequency and the pump frequency. Thus, Δ represents the spectral offset between $\alpha(\omega)$ and the frequency eigenstates $|(\omega+\Delta)_3\rangle$, and if this discrepancy is corrected, e.g., by difference-frequency generation (DFG) using photon 3 and a field of frequency Δ, the state of photon 3 becomes

$$|\psi_3\rangle = \eta\int d\omega\int d\omega'\alpha(\omega)\Phi(\Omega-\omega,\omega'-\Delta)|\omega_3'\rangle, \tag{20}$$

where absence of the tilde signifies the correction has been applied. The teleportation fidelity

$$F = \eta\int d\omega\int d\omega'\alpha(\omega)\Phi(\Omega-\omega,\omega'-\Delta)\alpha(\omega')^* \tag{21}$$

approaches unity when the phase-matching function approaches the delta function $\delta(\omega-\omega')$. This condition implies that photons 2 and 3 should have infinite bandwidth and, per the cw limit, be highly entangled.

The example above clarifies the role of the measurement information, namely, this information complements the quantum channel by specifying the local (nonlinear) operator needed to recover the state. For an arbitrary joint spectral amplitude, the corrected spectral state of photon 3 is

$$|\psi_3\rangle = \eta\int d\omega\int d\omega'\alpha(\omega)f(\Omega-\omega,\omega'-\Delta)|\omega_3'\rangle, \tag{22}$$

while the fidelity is

$$F_{\text{spectral}} = \eta\int d\omega\int d\omega'\alpha(\omega)f(\Omega-\omega,\omega'-\Delta)\alpha(\omega')^*. \tag{23}$$

2.2 Transverse-spatial teleportation

The scheme we have devised in Sec. 2.1 for teleporting the spectral amplitude of a single photon can be applied, largely unchanged, to the cause of teleporting the transverse-spatial amplitude. This approach has been suggested independently by Walborn *et al*.[10] In that proposal, the angular spectrum of photon 1 is defined by the state

$$|\psi_1\rangle = \int u(\mathbf{q})|\mathbf{q}_1\rangle d\mathbf{q}, \tag{24}$$

where $\mathbf{q}$ is the two-dimensional transverse wave vector, $u(\mathbf{q})$ is the normalized probability amplitude (angular spectrum), and $|\mathbf{q}_1\rangle$ is the state in which photon 1 has transverse wave vector $\mathbf{q}$.

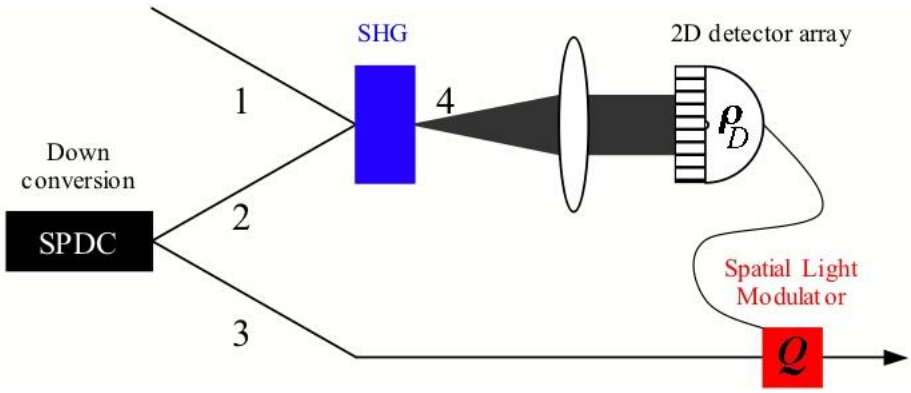

Fig. 2. A physical implementation of the angular teleportation of photon 1 that uses a pair of transverse-spatially entangled photons from an SPDC source (photons 2 and 3) and that up-converts photons 1 and 2 into photon 4. Walborn *et al*. have suggested that the transverse wave vector of photon 4 can be imaged onto a two-dimensional planar detector array by using a lens to map the momentum vector $\mathbf{q}_D$ onto the position vector $\boldsymbol{\rho}_D$.[11] This classical measurement information then provides knowledge that is used to correct the transverse-spatial state of photon 3, e.g., using a spatial light modulator.[10]

The resource for teleporting the transverse-spatial amplitude is a pair of spatially entangled photons 2 and 3 in the state

$$|\varphi_{23}\rangle = \int d\mathbf{q}\int d\mathbf{q}'\vartheta(\mathbf{q},\mathbf{q}')|\mathbf{q}_2,\mathbf{q}'_3\rangle, \tag{25}$$

where $\vartheta(\mathbf{q}, \mathbf{q}')$ is the angular spectrum (amplitude) with photon 2 having transverse wave vector $\mathbf{q}$ and photon 3 having $\mathbf{q}'$. Walborn *et al*. also employ up-conversion (second harmonic generation, SHG) to entangle the transverse wave vectors of photons 1 and 2 and produce the state

$$|\chi_{34}\rangle = \int d\mathbf{q}\int d\mathbf{q}'\int d\mathbf{q}''u(\mathbf{q})\vartheta(\mathbf{q}',\mathbf{q}'')|\mathbf{q}''_3,(\mathbf{q}+\mathbf{q}')_4\rangle, \tag{26}$$

which is analogous to the discussion of Sec. 2.1 on spectral teleportation. Walborn *et al*. suggest the use of a lens to map the momentum of the up-converted photon onto a planar array of point-like detectors, such that detection of photon 4 at a planar location defined by the vector $\boldsymbol{\rho}_D$ implies a detected transverse wave vector $\mathbf{q}_D = \kappa\boldsymbol{\rho}_D/f$, where κ is the magnitude of the up-converted photon wave vector and f is the focal length of the lens.[10], [11] The suggested physical implementation is sketched in Fig. 2. The resulting unnormalized state of photon 3 is

$$|\tilde{\psi}_3\rangle = \int d\mathbf{q}\int d\mathbf{q}'u(\mathbf{q})\vartheta(\mathbf{q}_D-\mathbf{q},\mathbf{q}')|\mathbf{q}'_3\rangle. \tag{27}$$

As for the previously considered case of spectral teleportation, Walborn *et al*. have shown that under idealized conditions, namely, when the joint angular spectrum approaches a delta function, then unit teleportation fidelity can be achieved when a shift $\mathbf{Q}$ is applied to the angular state of photon 3. This yields the fidelity

$$F_{\text{spatial}} = \int d\mathbf{q}\int d\mathbf{q}'u(\mathbf{q})\vartheta(\mathbf{q}_D-\mathbf{q},\mathbf{q}'-\mathbf{Q})u(\mathbf{q}')^*, \tag{28}$$

where $\mathbf{Q}$ is the difference between the detected transverse wave vector and the mean wave vector of the pump. In the work of Walborn *et al.*, numerical calculations have shown that the relative ratio of the pump spectrum to the phase matching function is largely responsible for determining the observed fidelity, i.e., quantum teleportation is successful only for a highly entangled joint spatial amplitude.

2.3 Polarization teleportation

The teleportation of quantum information encoded into the polarization DOF of a single photon has been extensively discussed in the literature.[3]-[5] The focus of this section is to review the scheme of Kim *et al.* for performing polarization-encoded teleportation using a complete Bell-state measurement (BSM).[4] Whereas several linear optic methods exist for performing incomplete, or probabilistic, polarization-encoded BSMs, the scheme of Kim *et al*. relies on the nonlinear process of up-conversion (sum frequency generation, SFG) to distinguish between all four possible Bell states.

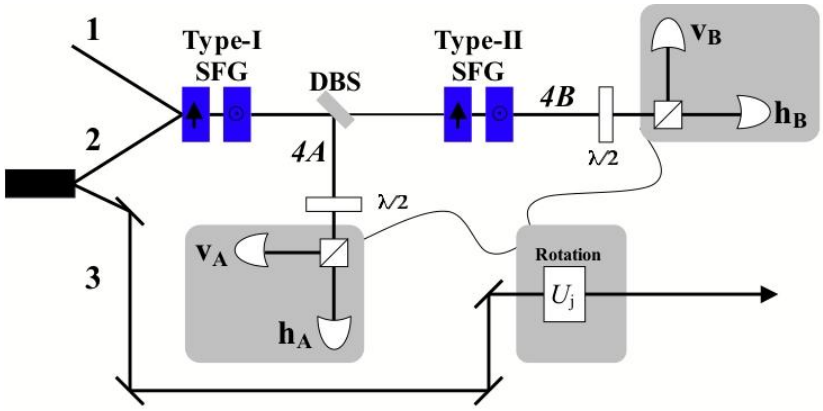

Fig. 3. A physical implementation of performing a complete BSM based on a series of potential up-conversion events, following the experimental design of Ref. [4].

The scheme of Kim *et al.* for performing a complete BSM is shown in Fig. 3, where a sequence of type-I and type-II SFG events leads to four distinct measurement outcomes. The first type-I SFG crystal transforms a pair of vertically polarized photons into a single, horizontally polarized photon, while the second type-I SFG crystal transforms a pair of horizontally polarized photons into a single, vertically polarized photon. For the sequence of type-II SFG crystals, the first crystal transforms a state in which photon 1 is horizontally polarized and photon 2 is vertically polarized to a single, horizontally polarized photon, whereas the second type-II SFG crystal transform a vertically polarized photon 1 and horizontally polarized photon 2 into a vertically polarized photon 4. As originally noted by Kim *et al*., the means for distinguishing between these two type-II SFG events rests on the fact that photons 1 and 2 need not have the same mean frequency.[4] Consequently, the wavelengths of these photons can be chosen so that phase-matching requirements for the two type-II SFG events are distinct.

In between the type-I and type-II crystal pairs, a dichroic beam splitter picks off the up-converted photon generated by a type-I SFG event. In front of both detection stages, a half-wave plate erases information about which crystal gave rise to the up-converted photon; otherwise, sufficient information exists at each detector stage to identify how the photon was generated. Then, depending on which detector registers the up-converted photon, the state of photon 3 is equivalent to the initial qubit, up to a local unitary transformation that is determined by the measurement outcome, cf. Sec. 1.1. As mentioned earlier, this setup has been implemented experimentally by Kim *et al.*, who obtained a fidelity of 0.83 while using spatial filtering (pin holes).[4]

2.4 Total teleportation

In the preceding sections, we have outlined the component protocols for teleporting different DOFs of a single photon state, i.e., the spectral, transverse-spatial, and polarization states. To the extent that these different DOFs belong to uncoupled physical systems, the three distinct acts of teleportation can be implemented separately. However, it is interesting to ask if these three protocols can be combined into a single setup so that all three DOFs of a single photon are teleported simultaneously. We believe that the role of up-conversion in all three implementations provides a route to the design of such a setup. Shown in Fig. 4 is a composite experiment in which all three protocols are implemented.

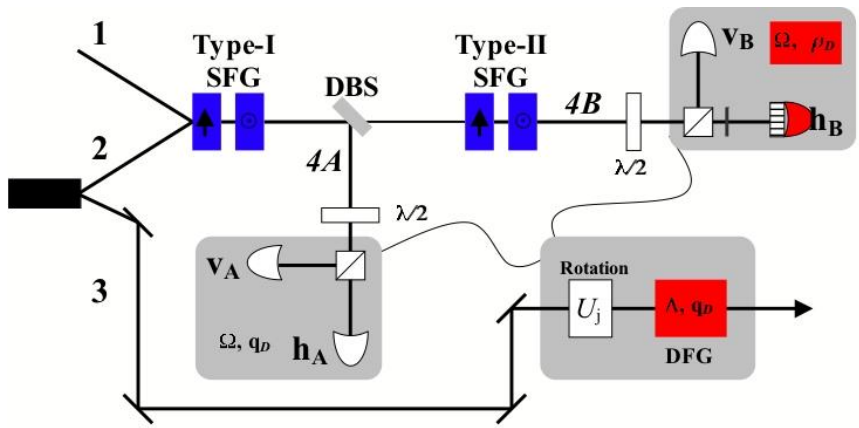

Fig. 4. A composite implementation of the spectral, transverse-spatial, and polarization-encoded quantum teleportation protocols. The total state of photon 1 carries the quantum information of interest, while photons 2 and 3 are simultaneously entangled in the spectral, transverse-spatial, and polarization DOFs. The blue boxes represent up-conversion (SFG) crystals that are cut and oriented to generate specific polarization states. A dichroic beam splitter (DBS) isolate an up-converted photon from type-I SFG and directs it to detector stage *A*, while a photon generated by type-II SFG is analyzed at detector stage *B*. Each detector stage uses a half-wave plate to erase information about which SFG event lead to up-conversion, and a polarizing beam splitter to analyze components of the rotated polarization state. As part of each individual detector, the incoming photon is additionally analyzed with respect to the spectral and angular states. This can be accomplished, e.g., using a narrow bandwidth spectral filter and the momentum imaging proposed by Walborn *et al.*, [11] though more efficient approaches may also be possible.

The execution of the protocol begins by preparing an initial state of photon 1 given by

$$|\psi_1\rangle = \int d\omega \int d\mathbf{q}\left[A(\omega,\mathbf{q})\left|H(\omega,\mathbf{q})_1\right\rangle + B(\omega,\mathbf{q})\left|V(\omega,\mathbf{q})_1\right\rangle\right] \tag{29}$$

where $A(\omega, \mathbf{q})$ and $B(\omega, \mathbf{q})$ are the probability amplitudes for the horizontally and vertically polarized components of a photon with frequency ω and transverse-wave vector $\mathbf{q}$. Similarly, photons 2 and 3 are prepared in the state

$$|\varphi_{23}\rangle = \frac{1}{\sqrt{2}}\int d\omega \int d\omega' \int d\mathbf{q} \int d\mathbf{q}' P(\omega,\mathbf{q},\omega',\mathbf{q}')\left[\left|H(\omega,\mathbf{q})_2, V(\omega',\mathbf{q}')_3\right\rangle + \left|V(\omega,\mathbf{q})_2, H(\omega',\mathbf{q}')_3\right\rangle\right] \tag{30}$$

where, for simplicity, we have considered the case that the joint polarization states have the same joint spectral-spatial probability amplitude $P(\omega, \mathbf{q}, \omega', \mathbf{q}')$. The composite biphoton state following the series of SFG events shown in Fig. 4, including the erasure of polarization information, is

$$\begin{aligned}
|\chi_{34}\rangle = \frac{c}{2}\int d\omega \int d\omega' \int d\omega'' \int d\mathbf{q} \int d\mathbf{q}' \int d\mathbf{q}'' P(\omega',\mathbf{q}',\omega'',\mathbf{q}'') \\
\times\Big\{\left[A(\omega,\mathbf{q})\left|V(\omega'',\mathbf{q}'')_3\right\rangle + B(\omega,\mathbf{q})\left|H(\omega'',\mathbf{q}'')_3\right\rangle\right] \otimes \left|H(\omega+\omega',\mathbf{q}+\mathbf{q}')_{4A}\right\rangle \\
+\left[A(\omega,\mathbf{q})\left|V(\omega'',\mathbf{q}'')_3\right\rangle - B(\omega,\mathbf{q})\left|H(\omega'',\mathbf{q}'')_3\right\rangle\right] \otimes \left|V(\omega+\omega',\mathbf{q}+\mathbf{q}')_{4A}\right\rangle \\
+\left[A(\omega,\mathbf{q})\left|H(\omega'',\mathbf{q}'')_3\right\rangle + B(\omega,\mathbf{q})\left|V(\omega'',\mathbf{q}'')_3\right\rangle\right] \otimes \left|H(\omega+\omega',\mathbf{q}+\mathbf{q}')_{4B}\right\rangle \\
-\left[A(\omega,\mathbf{q})\left|V(\omega'',\mathbf{q}'')_3\right\rangle - B(\omega,\mathbf{q})\left|H(\omega'',\mathbf{q}'')_3\right\rangle\right] \otimes \left|V(\omega+\omega',\mathbf{q}+\mathbf{q}')_{4B}\right\rangle\Big\}.
\end{aligned} \tag{31}$$

Assuming detection of a photon with frequency Ω and transverse-wave vector $\mathbf{q}_D$ at the detector labeled $\mathbf{h_B}$ in Fig. 4, the state of photon 3 becomes

$$\begin{aligned}
|\tilde{\psi}_3\rangle = \eta\int d\omega \int d\omega' \int d\mathbf{q} \int d\mathbf{q}' P(\Omega-\omega,\mathbf{q}_D-\mathbf{q},\omega',\mathbf{q}') \\
\times\left[A(\omega,\mathbf{q})\left|H(\omega',\mathbf{q}')_3\right\rangle + B(\omega,\mathbf{q})\left|V(\omega',\mathbf{q}')_3\right\rangle\right].
\end{aligned} \tag{32}$$

Detection at the three remaining detectors give similar results. The classical measurement information can be used to recover the intended quantum state. For this case, the identity operator is the local unitary transformation for the polarization component, while Δ and **Q** are the shifts applied to the spectral and angular DOFs, respectively. Performing these operations on photon 3 yields the state

$$|\psi_3\rangle = \eta \int d\omega \int d\omega' \int d\mathbf{q} \int d\mathbf{q}' P(\Omega - \omega, \mathbf{q}_D - \mathbf{q}, \omega' - \Delta, \mathbf{q}' - \mathbf{Q}) \times \left[A(\omega, \mathbf{q}) \left| H(\omega', \mathbf{q}')_3 \right\rangle + B(\omega, \mathbf{q}) \left| V(\omega', \mathbf{q}')_3 \right\rangle \right]. \tag{33}$$

The composite teleportation fidelity is then given by

$$F = \eta \int d\omega \int d\omega' \int d\mathbf{q} \int d\mathbf{q}' \left[A(\omega, \mathbf{q}) P(\Omega - \omega, \mathbf{q}_D - \mathbf{q}, \omega' - \Delta, \mathbf{q} - \mathbf{Q}) A(\omega', \mathbf{q}')^* + B(\omega, \mathbf{q}) P(\Omega - \omega, \mathbf{q}_D - \mathbf{q}, \omega' - \Delta, \mathbf{q} - \mathbf{Q}) B(\omega', \mathbf{q}')^* \right]. \tag{34}$$

The fidelity in Eq. (34) for total teleportation of the single-photon state can be compared to the fidelities obtained for the cases of spectral teleportation (23) and transverse-spatial teleportation (30). When the single and joint probability amplitudes factor with respect to the spectral and transverse-spatial DOFs, e.g.,

$$A(\omega, \mathbf{q}) = a\alpha(\omega) u(\mathbf{q}), \tag{35}$$

$$B(\omega, \mathbf{q}) = b\alpha(\omega) u(\mathbf{q}), \tag{36}$$

and

$$P(\omega, \mathbf{q}, \omega', \mathbf{q}') = f(\omega, \omega') \vartheta(\mathbf{q}, \mathbf{q}'), \tag{37}$$

the composite fidelity is the product of the individual fidelities,

$$F = F_{\text{spectral}} F_{\text{spatial}} F_{\text{polarization}}, \tag{38}$$

as should be expected for uncoupled systems. Incidentally, the conditions for unit fidelity established in each uncoupled case carry over to fidelity of the composite system.

For the case the photonic DOFs are coupled, however, the composite fidelity must be determined by the full, joint spectral-spatial probability amplitude. In particular, if the amplitude(s) to be teleported (as specified by $\alpha(\omega, \mathbf{q})$ and $\beta(\omega, \mathbf{q})$) can not be factorized into spectral, spatial, and polarization components, then it is necessary that the spectral and spatial DOFs of the mediating photon pair be entangled in order for teleportation to occur.

3. CONCLUSIONS

We have proposed a means for teleporting the total quantum state of a single photon, i.e., simultaneous teleportation of the spectral, transverse-spatial, and polarization states. This proposals combines together implementations for separately teleporting each DOF. The common element in all of three schemes is the use of up-conversion, e.g., adding together the frequencies (or wave vectors or polarizations) of two photons, and the subsequent detection of a single photon. We have shown that in the limit that photons 2 and 3, which serve as the quantum channel, are perfectly entangled, then unit teleportation fidelity can be obtained. Physical constraints, however, preclude the possibility that perfectly entangled states will be realized experimentally (the phase-matching functions governs the approximation to the EPR-like state). Nonetheless, this limiting case has provided an understanding of how the classical measurement information can be incorporated into the implementation.

In regards to the up-conversion process, e.g., SFG, SHG, or DFG, we acknowledge that the efficiency for this process in most nonlinear optical crystals is generally too small to be useful for implementing these ideas with current technology. However, the physical implementations described here are useful for clarifying that there is an experimental route to total teleportation of a single-photon state. Moreover, the potential for future improvements in the efficiency of sources and detectors leaves open the questions as to whether these ideas will be experimentally realized.

ACKNOWLEDGEMENTS

The submitted manuscript has been authored by a contractor of the U.S. Government under Contract No. DE-AC05-00OR22725. Accordingly, the U.S. Government retains a non-exclusive, royalty-free license to publish or reproduce the published form of this contribution, or allow others to do so, for U.S. Government purposes.

REFERENCES

[1] Bennett, C. H., Brassard, G., Crépeau, C., Jozsa, R., Peres, A. and Wootters, W. K., "Teleporting an unknown quantum state via dual classical and Einstein-Podolsky-Rosen Channels," Phys. Rev. Lett., **70**, 1895-1899 (1993).

[2] Barrett, M. D., Chiaverini, J., Schaetz, T., Britton, J., Itano, W. M., Jost, J. D., Knill, E., Langer, C., Leibfried, D., Ozeri, R. and Wineland, D. J.,"Deterministic quantum teleportation of atomic qubits," Nature, **429**, 737-739 (2004).

[3] Bouwmeester, D., Pan, J.-W., Mattle, K., Ebi, M., Weinfurter, H. and Zeilinger, A., "Experimental quantum teleportation," Nature, **390**, 575-579 (1997).

[4] Kim, Y.-H., Kulik, S. P. and Shih, Y., "Quantum teleportation of a polarization state with a complete Bell state measurement," Phys. Rev. Lett., **86**, 1370-1373 (2001).

[5] Jennewein, T., Weihs, G., Pan, J.-W. and Zeilinger, A., "Experimental nonlocality proof of quantum teleportation and entanglement swapping," Phys. Rev. Lett., **88**, 017903 (2002).

[6] Humble, T. S. and Grice, W. P., "Spectral effects in quantum teleportation," Phys. Rev. A., **75**, 022307 (2007).

[7] Ekert, A. K. and Knight, P. L., "Entangled quantum systems and the Schmidt decomposition," Am. J. Phys., **63**, 415-423 (1995).

[8] Parker, S., Bose, S. and Plenio, M. B., "Entanglement quantification and purification in continuous-variable systems," Phys. Rev. A, **61**, 032305 (2000).

[9] Grice, W. P. and Walmsley, I. A., "Spectral information and distinguishability in type-II down-conversion with a broadband pump," Phys. Rev. A, **56**, 1627-1634 (1997).

[10] Walborn, S. P., Ether, D. S., de Matos Filho, R. L. and Zagury, N., "Quantum teleportation of the angular spectrum of a single-photon field," Phys. Rev. A, **76**, 033801 (2007).

[11] Walborn, S. P., Lemelle, D. S., Almeida, M. P. and Souto Ribeiro, P. H., "Quantum key distribution with higher-order alphabets using spatially encoded qudits," Phys. Rev. Lett., **96**, 090501 (2006).