EX 19.93

Problem 19.93 Each slender bar is 48 in. long and weighs 20 lb. Bar A is released in the horizontal position shown. The bars are smooth, and the coefficient of restitution of their impact is $e = 0.8$. Determine the angle through which B swings afterward.

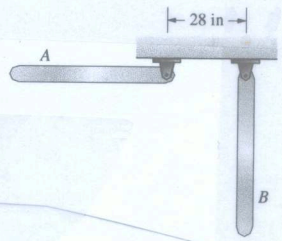

Solution

Data: $d = 28\text{in} = \frac{28}{12}\text{ ft}$

$L = 48\text{in} = 4\text{ ft}$

$W = 20\text{lb}$

$e = 0.8$

slender bars

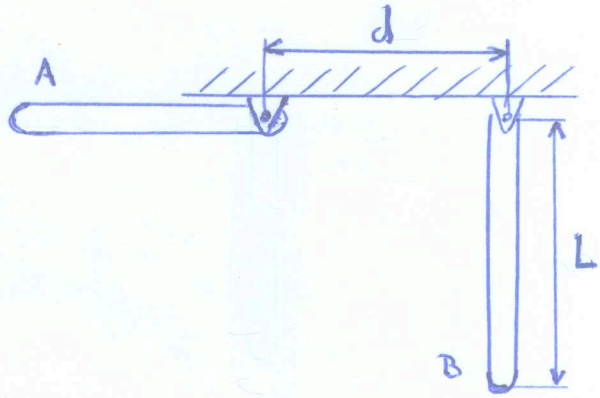

Concepts:

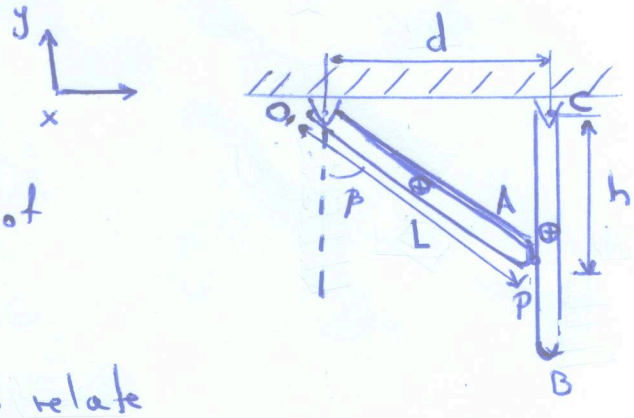

(1) Use Principle of Work and Energy for bar A to find velocity of point P of A at impact.

(2) Use coefficient of restitution to relate velocities at P before and after impact

(3) Use kinematics to relate velocities to angular velocities

(4) Use Principle of angular impulse and momentum to relate velocities of A and B

(5) Use Principle of Work and Energy for B to determine angle through which bar B swings.

(1) Use Principle of work and energy for bar A

Find height of center of mass of A at impact

$$\sin\beta = \frac{d}{L} \Longrightarrow \boxed{\beta = \sin^{-1}\left(\frac{d}{L}\right)}$$

$$-h = -L\cos\beta \Longrightarrow \boxed{h = L\cos\beta}$$

Height of center of mass of A at impact $= -\frac{h}{2} = -\frac{L}{2}\cos\beta$

From principle of work and energy

$$U_{12} = T_2 - \underset{0}{\underset{\shortparallel}{T_1}} \rightarrow \text{start from rest}$$

$$U_{12} = \int_0^{-\frac{h}{2}} -m_A g\, dy = \frac{m_A g h}{2}$$

$$T_2 = \frac{1}{2} I_A \omega_A^2$$

rotation about fixed axis

moment of inertia of A about pin joint

$$\Longrightarrow \frac{m_A g h}{\cancel{2}} = \frac{1}{\cancel{2}} I_A \omega_A^2 = \frac{1}{\cancel{2}}\left(\frac{1}{3} m_A L^2\right)\omega_A^2$$

$$\frac{3gh}{L^2} = \omega_A^2 \Longrightarrow \boxed{\omega_A = \sqrt{\frac{3gh}{L^2}}}$$

$$\vec{V}_{AP} = \underset{\vec{0}}{\underset{\shortparallel}{\vec{V}_O}} + \vec{\omega}_A \times \vec{r}_{P/O} = \omega_A \hat{k} \times (L\sin\beta\,\hat{i} - L\cos\beta\,\hat{j})$$

$$\boxed{\vec{V}_{AP} = \omega_A L\cos\beta\,\hat{i} + \omega_A L\sin\beta\,\hat{j}}$$

(2) Use coefficient of restitution

$$e = \frac{(\vec{V}_{AP}')_x - (\vec{V}_{BP}')_x}{\underbrace{\cancel{(\vec{V}_{BP})_x}}_{0} - (\vec{V}_{AP})_x}$$

initialy at rest

$$\Longrightarrow \quad -(\vec{V}_{AP})_x \, e = (\vec{V}_{AP}')_x - (\vec{V}_{BP}')_x$$

$$\boxed{-e\,\omega_A L \cos\beta = (\vec{V}_{AP}')_x - (\vec{V}_{BP}')_x}$$

(3) Use kinematics

$$\vec{V}_{AP}' = \underbrace{\vec{V}_O}_{\vec{0}} + \vec{\omega}_A' \times \vec{r}_{P/O} = \omega_A' \hat{k} \times (L\sin\beta\,\hat{i} - L\cos\beta\,\hat{j})$$

$$= \omega_A' L\cos\beta\,\hat{i} + \omega_A' L\sin\beta\,\hat{j}$$

$$\vec{V}_{BP}' = \underbrace{\vec{V}_C}_{\vec{0}} + \vec{\omega}_B' \times \vec{r}_{P/C} = \omega_B' \hat{k} \times (-h\hat{j}) = \omega_B' h$$

$$\Longrightarrow \quad -e\,\omega_A L\cos\beta = \omega_A' L\cos\beta - \omega_B' h$$

$$= \omega_A' L\cos\beta - \omega_B' L\cos\beta$$

$$\Longrightarrow \quad \boxed{-e\,\omega_A = \omega_A' - \omega_B'}$$

(4) Use principle of angular impulse and momentum

- We assume only impulsive forces contribute during impact

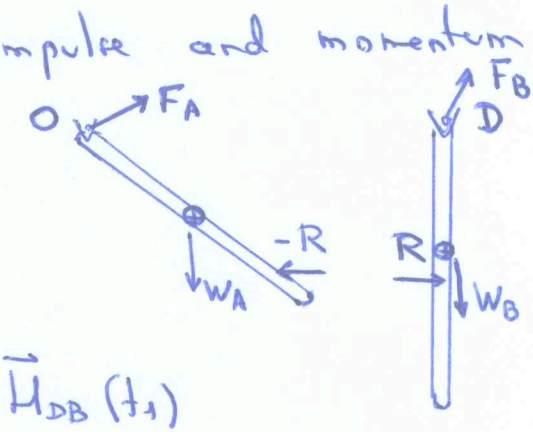

B: $$\int_{t_1}^{t_2} \left(\vec{r}_{P/D} \times \vec{R}\right) dt = \vec{H}_{DB}(t_2) - \vec{H}_{DB}(t_1)$$

$$\int_{t_1}^{t_2} \left(-h\hat{j} \times R\hat{i}\right) dt = I_B \omega_B' \hat{k} - 0\hat{k}$$

$$\Rightarrow h \int_{t_1}^{t_2} R\, dt = I_B \omega_B' \Rightarrow \boxed{\int_{t_1}^{t_2} R\, dt = \frac{I_B \omega_B'}{h}}$$

A: $$\int_{t_1}^{t_2} \left(\vec{r}_{P/A} \times -\vec{R}\right) dt = \vec{H}_{OA}(t_2) - \vec{H}_{OA}(t_1)$$

$$\int_{t_1}^{t_2} \left(L\sin\beta\, \hat{i} - L\cos\beta\, \hat{j}\right) \times \left(-R\hat{i}\right) dt = I_A \omega_A' - I_A \omega_A$$

$$-L\cos\beta \int_{t_1}^{t_2} R\, dt = I_A (\omega_A' - \omega_A)$$

$$\Rightarrow -L\cos\beta \left(\frac{I_B \omega_B'}{h}\right) = I_A (\omega_A' - \omega_A)$$

$$\Rightarrow \boxed{-\omega_B' = (\omega_A' - \omega_A)}$$

$h = L\cos\beta$

$I_A = I_B$

$$\Rightarrow \begin{cases} \omega_B' - \omega_A' = e\omega_A \\ \omega_B' + \omega_A' = \omega_A \end{cases} \Rightarrow \boxed{\omega_B' = \frac{\omega_A(1+e)}{2}} \quad \boxed{\omega_A' = \frac{\omega_A(1-e)}{2}}$$

(5) By the Principle of Work and Energy for B

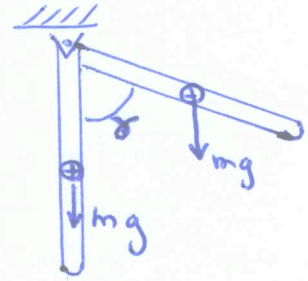

$$U_{12} = T_2 - T_1$$

$$U_{12} = \int_{-\frac{L}{2}}^{-\frac{L}{2}\cos\gamma} -mg\,dy = -mg\left(-\frac{L}{2}\cos\gamma + \frac{L}{2}\right)$$

$$= -mg\,\frac{L}{2}\left(1-\cos\gamma\right)$$

$$T_2 = 0$$

$$T_1 = \frac{1}{2} I_B \omega_B'^2 = \frac{1}{2} I_B \left(\omega_A \frac{(1+e)}{2}\right)^2 = \frac{1}{2}\,\frac{1}{3} m L^2 \left(\omega_A \frac{(1+e)}{2}\right)^2$$

$$-\cancel{m}g\,\cancel{\frac{L}{2}}\left(1-\cos\gamma\right) = -\cancel{\frac{1}{2}}\,\frac{1}{3}\cancel{m}L^{\cancel{2}}\left(\omega_A\frac{(1+e)}{2}\right)^2$$

$$g(1-\cos\gamma) = \frac{1}{3} L\,\omega_A^2\,\frac{(1+e)^2}{4} = \frac{L}{\cancel{3}}\left(\frac{\cancel{3}gh}{L^2}\right)\frac{(1+e)^2}{4}$$

$$g(1-\cos\gamma) = \frac{gh}{L}\,\frac{(1+e)^2}{4} = g\cos\beta\,\frac{(1+e)^2}{4}$$

$$\boxed{\cos\gamma = 1 - \frac{(1+e)^2\cos\beta}{4}}$$

$$\boxed{\gamma = \cos^{-1}\left(1 - \frac{(1+e)^2\cos\left(\sin^{-1}\left(\frac{d}{L}\right)\right)}{4}\right)}$$

$$\gamma = 70^\circ$$