EX 20.114

Problem 20.114* Arm BC has a mass of 12 kg, and its moments and products of inertia, in terms of the coordinate system shown, are $I_{xx} = 0.03$ kg-m^2, $I_{yy} = I_{zz} = 4$ kg-m^2, and $I_{xy} = I_{yz} = I_{xz} = 0$. At the instant shown, arm AB is rotating in the horizontal plane with a constant angular velocity of 1 rad/s in the counterclockwise direction viewed from above. Relative to arm AB, arm BC is rotating about the z axis with a constant angular velocity of 2 rad/s. Determine the force and couple exerted on arm BC at B.

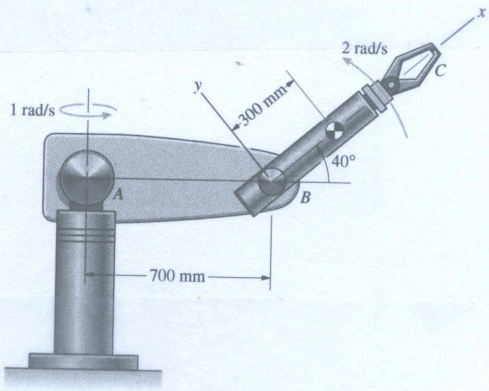

Solution

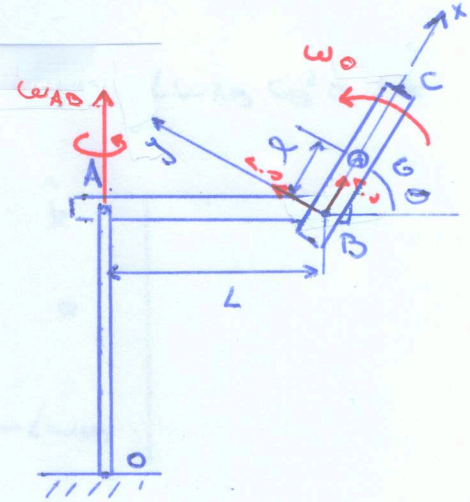

Data: $m_{BC} = 12$ kg

$\omega_{AB} = 1$ rad/s constant

$\omega_0 = 2$ rad/s constant

$L = 700$ mm $= 0.7$ m

$\theta = 40°$

$l = 300$ mm $= 0.3$ m

Moments and Products of inertia in terms of body-fixed coordinate system

$$\begin{cases} (I_{xx})_B = 0.03 \text{ kg m}^2 \\ (I_{yy})_B = (I_{zz})_B = 4 \text{ kg m}^2 \\ (I_{xy})_B = (I_{yz})_B = (I_{xz})_B = 0 \end{cases}$$

$$\vec{\Omega} = \vec{\omega}_{BC} = \omega_{AB} \sin\theta \, \hat{i} + \omega_{AB} \cos\theta \, \hat{j} + \omega_0 \hat{k}$$

Body-fixed coord. system

By kinematics

$$\vec{a}_B = \underset{\vec{0}}{\vec{a}_A} + \vec{\alpha}_{AB} \times \vec{r}_{B/A} + \vec{\omega}_{AB} \times (\vec{\omega}_{AB} \times \vec{r}_{B/A})$$

$$\vec{\omega}_{AB} = \omega_{AB}\sin\sigma\,\hat{i} + \omega_{AB}\cos\sigma\,\hat{j}$$

$$\vec{r}_{B/A} = L\cos\sigma\,\hat{i} - L\sin\sigma\,\hat{j}$$

$$\vec{\omega}_{AB}\times\vec{r}_{B/A} = \begin{vmatrix} \hat{i} & \hat{j} & \hat{k} \\ \omega_{AB}\sin\sigma & \omega_{AB}\cos\sigma & 0 \\ L\cos\sigma & -L\sin\sigma & 0 \end{vmatrix}$$

$$= 0\,\hat{i} - 0\,\hat{j} + \left(-L\omega_{AB}\sin^2\sigma - L\omega_{AB}\cos^2\sigma\right)\hat{k}$$

$$= -L\omega_{AB}\,\hat{k}$$

$$\vec{\omega}_{AB}\times\left(\vec{\omega}_{AB}\times\vec{r}_{B/A}\right) = \begin{vmatrix} \hat{i} & \hat{j} & \hat{k} \\ \omega_{AB}\sin\sigma & \omega_{AB}\cos\sigma & 0 \\ 0 & 0 & -L\omega_{AB} \end{vmatrix}$$

$$= -L\omega_{AB}^2\cos\sigma\,\hat{i} + L\omega_{AB}^2\sin\sigma\,\hat{j}$$

$$\boxed{\vec{\omega}_{AB}\times\left(\vec{\omega}_{AB}\times\vec{r}_{B/A}\right) = -L\omega_{AB}^2\left(\cos\sigma\,\hat{i} - \sin\sigma\,\hat{j}\right)} = -\omega_{AB}^2\,\vec{r}_{B/A}$$

$$\vec{\alpha}_{AB} = \frac{d(\vec{\omega}_{AB})_x}{dt}\hat{i} + \frac{d(\vec{\omega}_{AB})_y}{dt}\hat{j} + \frac{d(\vec{\omega}_{AB})_z}{dt}\hat{k} + \vec{\Omega}\times\vec{\omega}_{AB}$$

$$= \omega_{AB}\cos\sigma\,\dot{\sigma}\,\hat{i} - \omega_{AB}\sin\sigma\,\dot{\sigma}\,\hat{j} + 0\,\hat{k} + \begin{vmatrix} \hat{i} & \hat{j} & \hat{k} \\ \omega_{AB}\sin\sigma & \omega_{AB}\cos\sigma & \omega_0 \\ \omega_{AB}\sin\sigma & \omega_{AB}\cos\sigma & 0 \end{vmatrix}$$

$$\underset{\dot{\sigma}=\omega_0}{=} \omega_{AB}\omega_0\cos\sigma\,\hat{i} - \omega_{AB}\omega_0\sin\sigma\,\hat{j} - \omega_{AB}\omega_0\cos\sigma\,\hat{i} + \omega_{AB}\omega_0\sin\sigma\,\hat{j}$$

$$\boxed{\vec{\alpha}_{AB} = \vec{0}}$$

$$\Rightarrow \boxed{\vec{a}_B = -L\omega_{AB}^2\left(\cos\sigma\,\hat{i} - \sin\sigma\,\hat{j}\right)}_2 \quad \boxed{\vec{a}_B = 0.536\,\hat{i} + 0.450\,\hat{j}}$$

$$\vec{a}_G = \vec{a}_B + \vec{\alpha}_{BC} \times \vec{r}_{G/B} + \vec{\omega}_{BC} \times (\vec{\omega}_{BC} \times \vec{r}_{G/B})$$

$$\vec{\alpha}_{BC} = \frac{d(\vec{\omega}_{BC})_x}{dt}\hat{i} + \frac{d}{dt}(\vec{\omega}_{BC})_y \hat{j} + \frac{d}{dt}(\vec{\omega}_{BC})_z \hat{k} + \underbrace{\cancel{\vec{\Omega} \times \vec{\omega}_{BC}}}_{\vec{0}} \qquad \vec{\Omega} = \vec{\omega}_{BC}$$

$$\boxed{\vec{\alpha}_{BC} = \omega_{AB}\omega_0 \cos\sigma\, \hat{i} - \omega_{AB}\omega_0 \sin\sigma\, \hat{j}}$$

$$\vec{r}_{G/B} = l\,\hat{i}$$

$$\vec{\omega}_{BC} \times \vec{r}_{G/B} = \begin{vmatrix} \hat{i} & \hat{j} & \hat{k} \\ \omega_{AB}\sin\sigma & \omega_{AB}\cos\sigma & \omega_0 \\ l & 0 & 0 \end{vmatrix} = 0\,\hat{i} + \omega_0 l\,\hat{j} - l\omega_{AB}\cos\sigma\,\hat{k}$$

$$\vec{\omega}_{BC} \times (\vec{\omega}_{BC} \times \vec{r}_{G/B}) = \begin{vmatrix} \hat{i} & \hat{j} & \hat{k} \\ \omega_{AB}\sin\sigma & \omega_{AB}\cos\sigma & \omega_0 \\ 0 & l\omega_0 & -l\omega_{AB}\cos\sigma \end{vmatrix} = (-l\omega_{AB}^2\cos^2\sigma - l\omega_0^2)\hat{i} + l\omega_{AB}^2 \sin\sigma\cos\sigma\,\hat{j} + l\omega_{AB}\omega_0\sin\sigma\,\hat{k}$$

$$\boxed{\vec{\omega}_{BC} \times (\vec{\omega}_{BC} \times \vec{r}_{G/B}) = -l(\omega_{AB}^2\cos^2\sigma + \omega_0^2)\hat{i} + l\omega_{AB}^2 \sin\sigma\cos\sigma\,\hat{j} + l\omega_{AB}\omega_0\sin\sigma\,\hat{k}}$$

$$\vec{\alpha}_{BC} \times \vec{r}_{G/B} = \begin{vmatrix} \hat{i} & \hat{j} & \hat{k} \\ \omega_{AB}\omega_0\cos\sigma & -\omega_{AB}\omega_0\sin\sigma & 0 \\ l & 0 & 0 \end{vmatrix} = l\omega_{AB}\omega_0\sin\sigma\,\hat{k}$$

$$\vec{a}_G = -l\omega_{AB}^2(\cos\sigma\,\hat{i} - \sin\sigma\,\hat{j}) + l\omega_{AB}\omega_0\sin\sigma\,\hat{k}$$
$$- l(\omega_{AB}^2\cos^2\sigma + \omega_0^2)\hat{i} + l\omega_{AB}^2\sin\sigma\cos\sigma\,\hat{j} + l\omega_{AB}\omega_0\sin\sigma\,\hat{k}$$

$$\boxed{\vec{a}_G = \left(-l\omega_{AB}^2\cos\sigma - l(\omega_{AB}^2\cos^2\sigma + \omega_0^2)\right)\hat{i} + \left(l\omega_{AB}^2\sin\sigma + l\omega_{AB}^2\sin\sigma\cos\sigma\right)\hat{j} + 2l\omega_{AB}\omega_0\sin\sigma\,\hat{k}}$$

$$\boxed{\vec{a}_G = -1.91\,\hat{i} + 0.598\,\hat{j} + 0.771\,\hat{k}}$$

By Newton's 2nd law

$$\sum \vec{F} = F_x\hat{i} + F_y j + F_z\hat{k} - mg\sin\sigma\,\hat{i} - mg\cos\sigma\,\hat{j}$$

$$= m\,\vec{a}_G$$

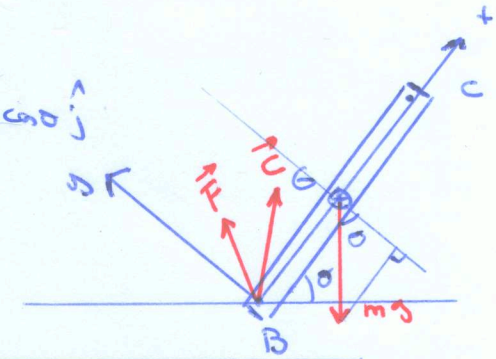

$$\boxed{\begin{aligned} F_x &= mg\sin\sigma - m\left(L\omega_{AB}^2\cos\sigma + l\left(\omega_{AB}^2\cos^2\sigma + \omega_o^2\right)\right) \\ F_y &= mg\cos\sigma + m\left(L\omega_{AB}^2\sin\sigma + l\,\omega_{AB}^2\sin\sigma\cos\sigma\right) \\ F_z &= 2ml\,\omega_{AB}\,\omega_o\sin\sigma \end{aligned}}$$

$$\boxed{\vec{F} = 52.72\,\hat{i} + 97.35\,\hat{j} + 9.26\,\hat{k}}$$

By the Angular Motion equation

$$\begin{bmatrix} \Sigma M_x \\ \Sigma M_y \\ \Sigma M_z \end{bmatrix} = \begin{bmatrix} & & \\ & I & \\ & & \end{bmatrix} \begin{bmatrix} d\omega_x/dt \\ d\omega_y/dt \\ d\omega_z/dt \end{bmatrix} + \begin{bmatrix} & & \\ & \Omega & \\ & & \end{bmatrix} \begin{bmatrix} & & \\ & I & \\ & & \end{bmatrix} \begin{bmatrix} \omega_x \\ \omega_y \\ \omega_z \end{bmatrix}$$

- We use this equation for the center of mass.
- We need the moment of inertia about the center of mass

Distance of center of mass from B:

$$\vec{d} = \vec{r}_{G/B} = l\,\hat{i} \implies d_x = l;\ d_y = 0;\ d_z = 0.$$

By the parallel-axis theorem

$$(I_{xx})_B = I_{xx} + (d_y^2 + d_z^2)m \Rightarrow I_{xx} = (I_{xx})_B = 0.03 \text{ kgm}^2$$

$$(I_{yy})_B = I_{yy} + (d_x^2 + d_z^2)m \Rightarrow I_{yy} = (I_{yy})_B - m d_x^2 = 2.92 \text{ kgm}^2$$

$$(I_{zz})_B = I_{zz} + (d_x^2 + d_y^2)m \Rightarrow I_{zz} = (I_{zz})_B - m d_x^2 = 2.92 \text{ kgm}^2$$

Similarly

$$(I_{xy})_B = I_{xy} + d_x d_y m \Rightarrow I_{xy} = (I_{xy})_B = 0$$

$$(I_{yz})_B = I_{yz} + d_y d_z m \Rightarrow I_{yz} = (I_{yz})_B = 0$$

$$(I_{xz})_B = I_{xz} + d_x d_z m \Rightarrow I_{xz} = (I_{xz})_B = 0$$

$$[I] = \begin{bmatrix} I_{xx} & -I_{xy} & -I_{xz} \\ -I_{xy} & I_{yy} & -I_{yz} \\ -I_{xz} & -I_{yz} & I_{zz} \end{bmatrix} = \begin{bmatrix} 0.03 & 0 & 0 \\ 0 & 2.92 & 0 \\ 0 & 0 & 2.92 \end{bmatrix} \text{kg m}^2$$

$$[\Omega] = \begin{bmatrix} 0 & -\Omega_z & \Omega_y \\ \Omega_z & 0 & -\Omega_x \\ -\Omega_y & \Omega_x & 0 \end{bmatrix} = \begin{bmatrix} 0 & -\omega_0 & \omega_{AB}\cos\sigma \\ \omega_0 & 0 & -\omega_{AB}\sin\sigma \\ -\omega_{AB}\cos\sigma & \omega_{AB}\cos\sigma & 0 \end{bmatrix}$$

$$\frac{d\omega_x}{dt} = \omega_{AB}\omega_0\cos\sigma \; ; \quad \frac{d\omega_y}{dt} = -\omega_{AB}\omega_0\sin\sigma \; ; \quad \frac{d\omega_z}{dt} = 0$$

$$\sum \vec{M} = \vec{C} + \vec{r}_{O/G} \times \vec{F}$$

$$= C_x\hat{i} + C_y\hat{j} + C_z\hat{k} + \begin{vmatrix} \hat{i} & \hat{j} & k \\ -l & 0 & 0 \\ F_x & F_y & F_z \end{vmatrix} = C_x\hat{i} + (C_y + lF_z)\hat{j} + (C_z - lF_y)\hat{k}$$

$$\Rightarrow \begin{bmatrix} C_x \\ C_y + \ell F_z \\ C_z - \ell F_y \end{bmatrix} = \begin{bmatrix} 0.03\,kgm^2 & 0 & 0 \\ 0 & 2.92\,kgm^2 & 0 \\ 0 & 0 & 2.92\,kgm^2 \end{bmatrix} \begin{bmatrix} \omega_{AB}\omega_0 \cos\sigma \\ -\omega_{AB}\omega_0 \sin\sigma \\ 0 \end{bmatrix}$$

$$+ \begin{bmatrix} 0 & -\omega_0 & \omega_{AB}\cos\sigma \\ \omega_0 & 0 & -\omega_{AB}\sin\sigma \\ -\omega_{AB}\cos\sigma & \omega_{AB}\sin\sigma & 0 \end{bmatrix} \begin{bmatrix} 0.03\,kgm^2 & 0 & 0 \\ 0 & 2.92\,kgm^2 & 0 \\ 0 & 0 & 2.92\,kgm^2 \end{bmatrix} \begin{bmatrix} \omega_{AB}\sin\sigma \\ \omega_{AB}\cos\sigma \\ \omega_0 \end{bmatrix}$$

$$= (0.03\,kgm^2)\,\omega_{AB}\omega_0\cos\sigma\,\hat{i} - (2.92\,kgm^2)\,\omega_{AB}\omega_0\sin\sigma\,\hat{j}$$

$$+ \begin{bmatrix} 0 & -\omega_0 & \omega_{AB}\cos\sigma \\ \omega_0 & 0 & -\omega_{AB}\sin\sigma \\ -\omega_{AB}\cos\sigma & \omega_{AB}\sin & 0 \end{bmatrix} \begin{bmatrix} (0.03\,kgm^2)\,\omega_{AB}\sin\sigma \\ (2.92\,kgm^2)\,\omega_{AB}\cos\sigma \\ (2.92\,kgm^2)\,\omega_0 \end{bmatrix}$$

$$= (0.03\,kgm^2)\,\omega_{AB}\omega_0\cos\sigma\,\hat{i} - (2.92\,kgm^2)\,\omega_{AB}\omega_0\sin\sigma\,\hat{j}$$

$$+ \left[-(2.92\,kgm^2)\,\omega_0\omega_{AB}\cos\sigma + (2.92\,kgm^2)\,\omega_{AB}\omega_0\cos\sigma \right]\hat{i}$$

$$+ \left[(0.03\,kgm^2)\,\omega_0\omega_{AB}\sin\sigma - (2.92\,kgm^2)\,\omega_0\omega_{AB}\sin\sigma \right]\hat{j}$$

$$+ \left[-(0.03\,kgm^2)\,\omega_{AB}^2\sin\sigma\cos\sigma + (2.92\,kgm^2)\,\omega_{AB}^2\sin\sigma\cos\sigma \right]\hat{k}$$

$$= (0.03\,kgm^2)\,\omega_{AB}\omega_0\cos\sigma\,\hat{i} - (5.81\,kgm^2)\,\omega_{AB}\omega_0\sin\sigma\,\hat{j}$$

$$+ (2.89\,kgm^2)\,\omega_{AB}^2\sin\sigma\cos\sigma\,\hat{k}$$

$$\Rightarrow \boxed{\begin{aligned} C_x &= (0.03\ kg\,m^2)\,\omega_{AB}\,\omega_0 \cos\sigma \\ C_y &= -(5.81\ kg\,m^2)\,\omega_{AB}\,\omega_0 \sin\sigma - l\,F_z \\ C_z &= (2.89\ kg\,m^2)\,\omega_{AB}^2 \sin\sigma \cos\sigma + l\,F_y \end{aligned}}$$

$$\begin{cases} C_x = 0.046\ N\text{-}m \\ C_y = -10.25\ N\text{-}m \\ C_z = 30.63\ N\text{-}m \end{cases}$$

$$\boxed{\vec{C} = 0.046\,\hat{i} - 10.25\,\hat{j} + 30.63\,\hat{k} \quad N\text{-}m}$$