The Euler Angles

Equations of Angular Motion:

Total Moment $\longleftrightarrow$ Angular velocity and Acceleration

How to use angular acceleration to find rigid body's angular position or orientation as a function of time?

In Planar Motion: Need 1 angle: θ

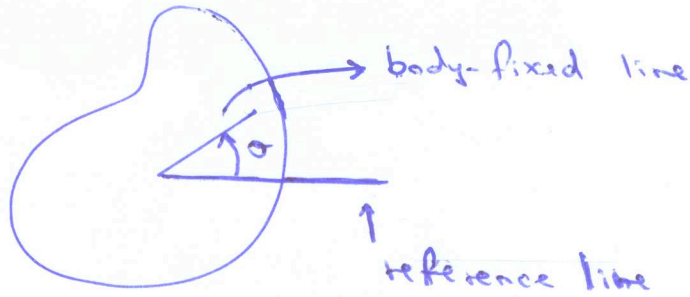

In Three-Dimensional Motion: Need 3 angles

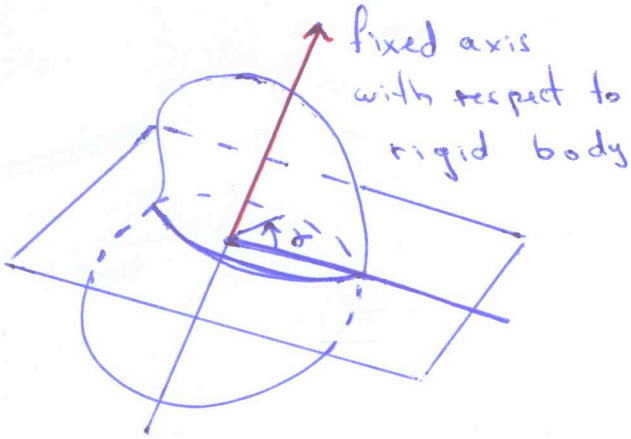

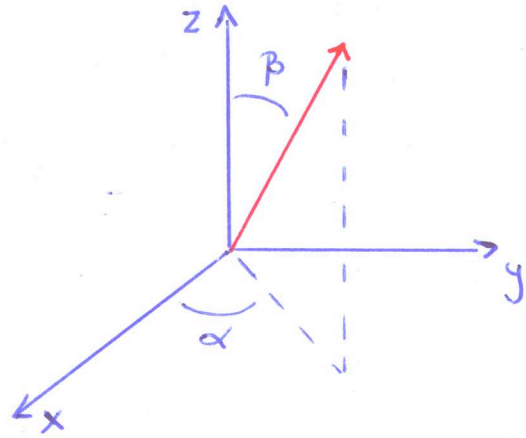

Three angles: $\underbrace{\alpha, \beta}_{\text{axis orientation}}$, $\gamma \rightarrow$ rigid body orientation about axis.

Euler Angles

(i) Objects with Axis of symmetry

(Simpler equations of angular motion)

Assume object has axis of rotational symmetry.

Introduce two reference frames:

- Inertial primary coordinate system XYZ
- Secondary coordinate system x'y'z'

(1) Reference position: xyz and XYZ are superimposed on each other

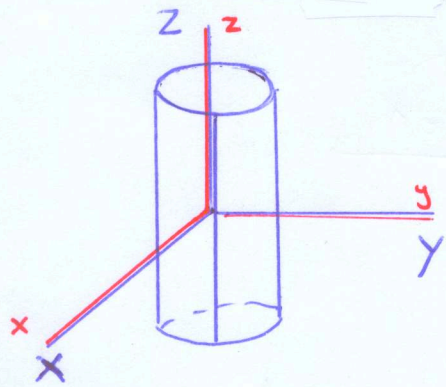

(2) Rotate object about with xyz coordinate system about z-axis (z-axis fixed)

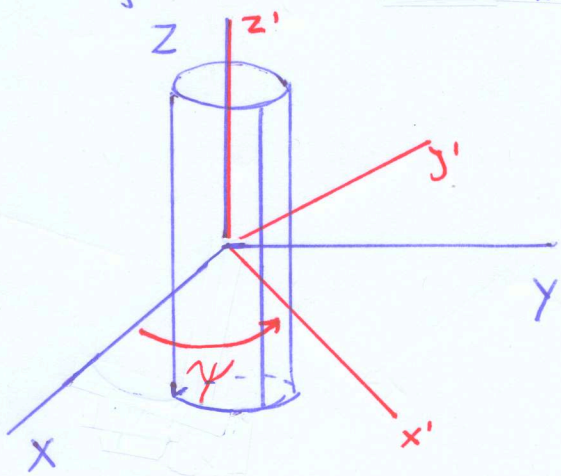

(3) Rotate object with xyz coordinate system about x' axis (x'-axis fixed)

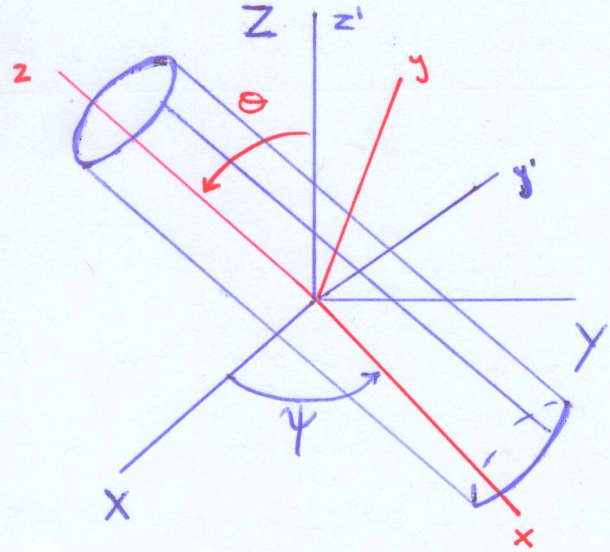

(4) Rotate object about its axis of symmetry

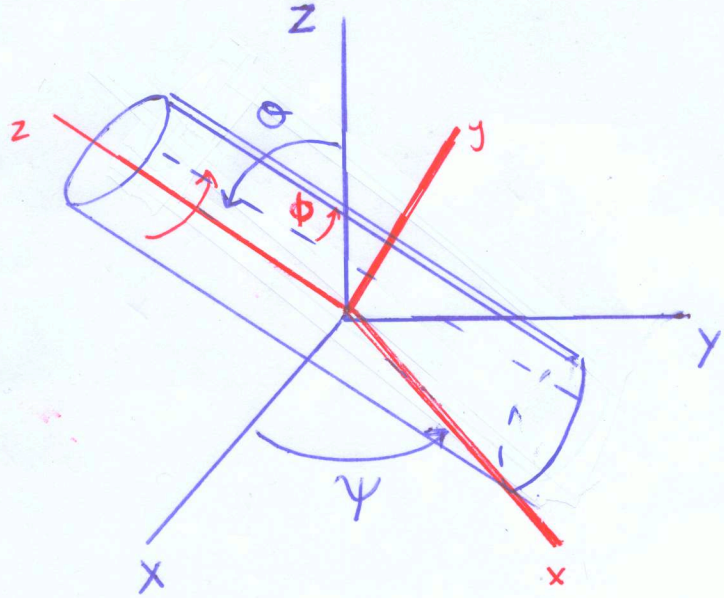

Orientation of secondary xyz system:

ψ: precession angle

θ: nutation angle

Rotation of rigid body relative to xyz system

ϕ : spin angle

Euler angles: ψ, θ, ϕ.

(orientation of rigid body with respect to primary coordinate system).

$\psi, \theta \rightarrow$ direction of axis of symmetry

$\phi \rightarrow$ rotation about axis of symmetry

<u>Equations of angular Motion</u>

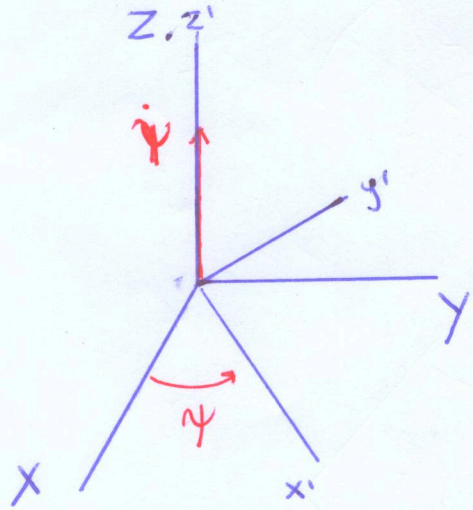

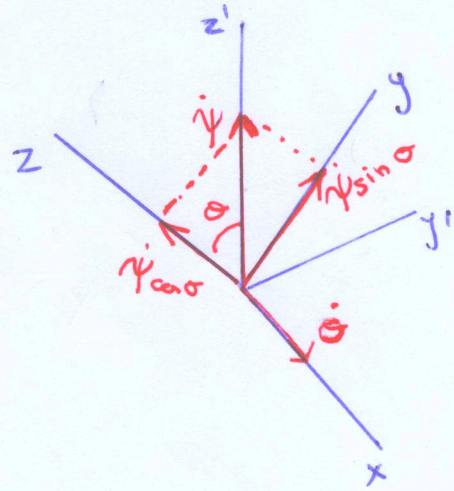

Angular velocity of secondary coordinate system

$$\vec{\Omega} = \Omega_x \hat{i} + \Omega_y \hat{j} + \Omega_z \hat{k}$$

$$= \dot{\theta}\,\hat{i} + \dot{\psi}\sin\theta\,\hat{j} + \dot{\psi}\cos\theta\,\hat{k}$$

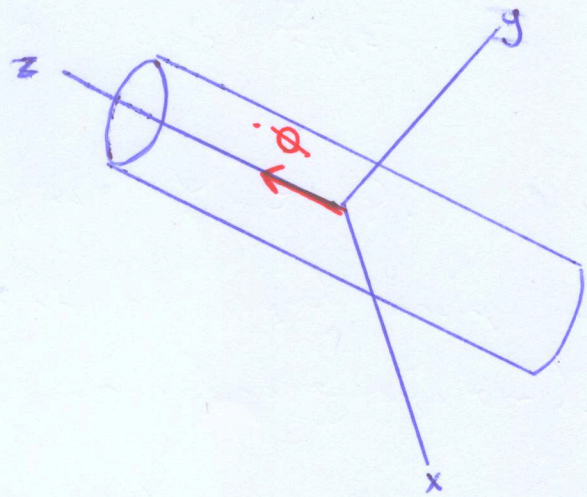

$$\vec{\omega}_{rel} = \dot{\phi}\,\hat{k}$$

$$\Longrightarrow \quad \vec{\omega} = \vec{\Omega} + \vec{\omega}_{rel}$$

$$\boxed{\vec{\omega} = \dot{\sigma}\,\hat{i} + \dot{\psi}\sin\sigma\,\hat{j} + (\dot{\phi} + \dot{\psi}\cos\sigma)\,\hat{k}}$$

The Angular equation of Motion

$$\begin{bmatrix} \Sigma M_x \\ \Sigma M_y \\ \Sigma M_z \end{bmatrix} = \begin{bmatrix} I_{xx} & -I_{xy} & -I_{xz} \\ -I_{xy} & I_{yy} & -I_{yz} \\ -I_{xz} & -I_{yz} & I_{zz} \end{bmatrix} \begin{bmatrix} \frac{d\omega_x}{dt} \\ \frac{d\omega_y}{dt} \\ \frac{d\omega_z}{dt} \end{bmatrix} + \begin{bmatrix} 0 & -\Omega_z & \Omega_y \\ \Omega_z & 0 & -\Omega_x \\ -\Omega_y & \Omega_x & 0 \end{bmatrix} \begin{bmatrix} I_{xx} & -I_{xy} & -I_{xz} \\ -I_{xy} & I_{yy} & -I_{yz} \\ -I_{xz} & -I_{yz} & I_{zz} \end{bmatrix} \begin{bmatrix} \omega_x \\ \omega_y \\ \omega_z \end{bmatrix}$$

$$\frac{d\omega_x}{dt} = \ddot{\sigma}$$

$$\frac{d\omega_y}{dt} = \ddot{\psi}\sin\sigma + \dot{\psi}\,\dot{\sigma}\cos\sigma$$

$$\frac{d\omega_z}{dt} = \ddot{\phi} + \ddot{\psi}\cos\sigma - \dot{\psi}\,\dot{\sigma}\sin\sigma$$

Because of objects rotational symmetry

$$I_{xy} = I_{yz} = I_{xz} = 0 \quad \text{and} \quad I_{xx} = I_{yy}$$

$$[I] = \begin{bmatrix} I_{xx} & 0 & 0 \\ 0 & I_{xx} & 0 \\ 0 & 0 & I_{zz} \end{bmatrix}$$

$$\Rightarrow \begin{bmatrix} \Sigma M_x \\ \Sigma M_y \\ \Sigma M_z \end{bmatrix} = \begin{bmatrix} I_{xx}\,\ddot{\theta} \\ I_{xx}\,(\ddot{\psi}\sin\theta + \dot{\psi}\dot{\theta}\cos\theta) \\ I_{zz}\,(\ddot{\phi} + \ddot{\psi}\cos\theta - \dot{\psi}\dot{\theta}\sin\theta) \end{bmatrix}$$

$$+ \begin{bmatrix} 0 & -\dot{\psi}\cos\theta & \dot{\psi}\sin\theta \\ \dot{\psi}\cos\theta & 0 & -\dot{\theta} \\ -\dot{\psi}\sin\theta & \dot{\theta} & 0 \end{bmatrix} \begin{bmatrix} I_{xx}\,\dot{\theta} \\ I_{xx}\,\dot{\psi}\sin\theta \\ I_{zz}\,(\dot{\phi} + \dot{\psi}\cos\theta) \end{bmatrix}$$

$$\Rightarrow \boxed{\begin{aligned} \Sigma M_x &= I_{xx}\,\ddot{\theta} + (I_{zz} - I_{xx})\,\dot{\psi}^2 \sin\theta\cos\theta + I_{zz}\,\dot{\phi}\,\dot{\psi}\sin\theta \\ \Sigma M_y &= I_{xx}\,(\ddot{\psi}\sin\theta + 2\dot{\psi}\dot{\theta}\cos\theta) - I_{zz}\,(\dot{\phi}\dot{\theta} + \dot{\psi}\dot{\theta}\cos\theta) \\ \Sigma M_z &= I_{zz}\,(\ddot{\phi} + \ddot{\psi}\cos\theta - \dot{\psi}\dot{\theta}\sin\theta) \end{aligned}}$$

Usually, we solved this numerically.

Steady Precession

$$\left.\begin{array}{l}\text{spin rate } \dot{\phi} \\ \text{nutation angle } \theta \\ \text{precession rate } \dot{\psi}\end{array}\right\} \text{constant} \Longrightarrow \begin{array}{l}\ddot{\phi} = 0 \\ \dot{\theta} = 0 \\ \ddot{\psi} = 0\end{array}$$

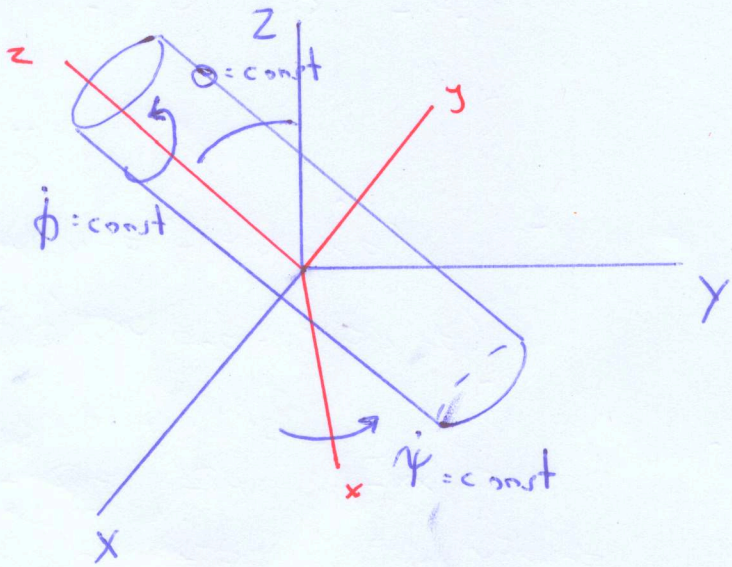

$$\sum M_x = (I_{zz} - I_{xx})\,\dot{\psi}^2 \sin\theta \cos\theta + I_{zz}\,\dot{\phi}\dot{\psi}\sin\theta$$

$$\sum M_y = 0$$

$$\sum M_z = 0$$

Precession of a Top

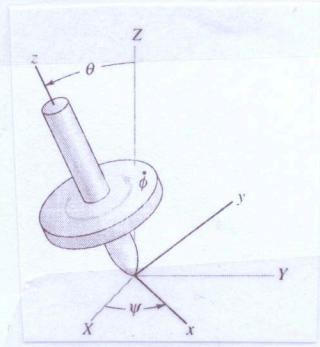

Initially spin axis remains vertical

"sleeping" motion

Spin rate decreases due to friction

Weight of top induces a moment.

Top's motion approximates steady precession.

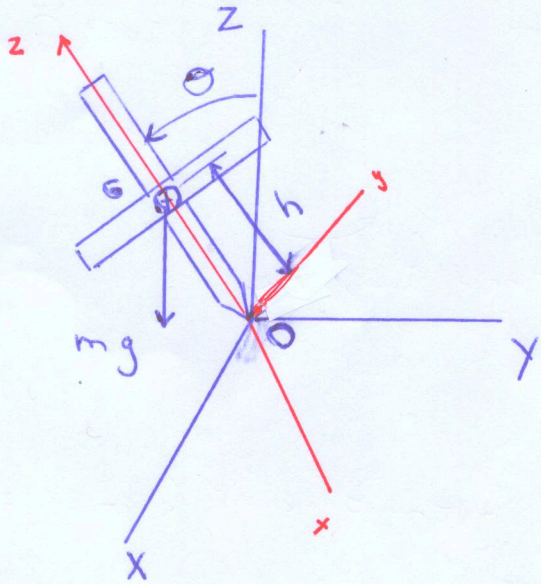

$$\vec{W} = mg\left(-\sin\theta\,\hat{j} - \cos\theta\,\hat{k}\right)$$

$$\vec{r}_{G/O} = h\,\hat{k}$$

$$\Sigma \vec{M}_O = \vec{r}_{G/O} \times \vec{W} = mgh\sin\theta\,\hat{i}$$

$$\Longrightarrow \boxed{\Sigma M_x = mgh\sin\theta = (I_{zz} - I_{xx})\,\dot{\psi}^2 \sin\theta\cos\theta + I_{zz}\,\dot{\phi}\,\dot{\psi}\sin\theta} \qquad (*)$$

Problem 20.70 The top is in steady precession with nutation angle $\theta = 15°$ and precession rate $\dot{\psi} = 1$ revolution per second. The mass of the top is 8×10^{-4} slug, its center of mass is 1 in. from the point, and its moments of inertia are $I_{xx} = 6 \times 10^{-6}$ slug-ft^2 and $I_{zz} = 2 \times 10^{-6}$ slug-ft^2. What is the spin rate $\dot{\phi}$ of the top in revolutions per second?

about O

Solution

$\theta = 15°$

$\dot{\psi} = 1$ rev/sec $= 2\pi$ rad/s

$m = 8 \cdot 10^{-4}$ slug

$h = 1$ in $= 1/12$ ft

$I_{xx} = 6 \cdot 10^{-6}$ slug ft^2

$I_{zz} = 2 \cdot 10^{-6}$ slug ft^2

$\dot{\phi} = ?$ in rev. per sec.

$$(*) \quad \dot{\phi} = \frac{mgh\sin\theta - (I_{zz} - I_{xx})\dot{\psi}^2 \sin\theta\cos\theta}{I_{zz}\dot{\psi}\sin\theta}$$

$$= 183 \text{ rad/s} = 29.1 \text{ rev/s}$$