Review session for exam 3

(I) Planar Kinematics of Rigid Bodies

Rigid Body: Distance between every pair of points remain constant.

(i) Rotation about a fixed axis

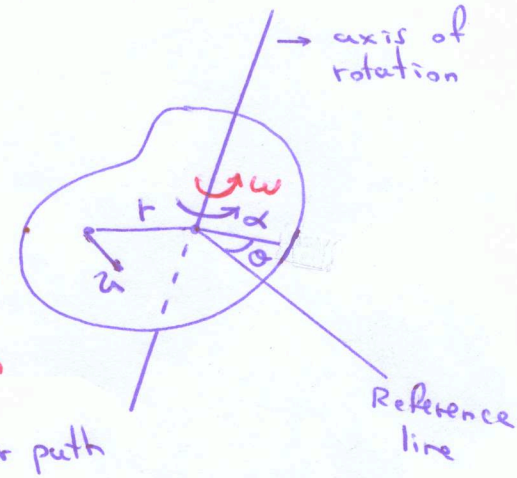

- Angular velocity $\omega = \frac{d\theta}{dt}$
- Angular acceleration $\alpha = \frac{d\omega}{dt} = \frac{d^2\theta}{dt^2}$
- Point not on axis move in circular path

$v = r\omega$ $\rightarrow$ $\vec{v}$ is tangent to circular path

tangential $\rightarrow$ $a_t = r\alpha$ $\qquad a_n = \frac{v^2}{r} = r\omega^2 \leftarrow$ normal

Note: $\vec{r} = r\hat{e}_r$ $\qquad$ Let $\boxed{r = \text{constant}}$:

$$\vec{v} = \frac{d\vec{r}}{dt} = r\frac{d\hat{e}_r}{dt} = r\omega\hat{e}_\theta \rightarrow \boxed{v = r\omega}$$

$$\vec{a} = \frac{d\vec{v}}{dt} = r\frac{d\omega}{dt}\hat{e}_\theta + r\omega\frac{d\hat{e}_t}{dt} = r\alpha\hat{e}_\theta - r\omega^2\hat{e}_r$$

$$\hat{e}_t = \hat{e}_\theta \quad \text{and} \quad \hat{e}_r = -\hat{e}_r$$

$$\Rightarrow \boxed{\vec{a} = r\alpha\hat{e}_t + r\omega^2\hat{e}_n}$$

Application: System of gears

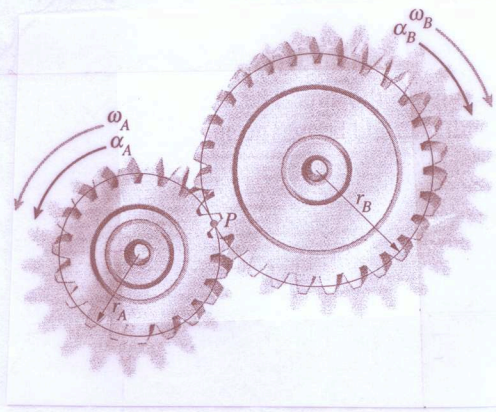

Velocity of gears equal at P

$$r_A\omega_A = r_B\omega_B \Rightarrow \boxed{\omega_B = \frac{r_A}{r_B}\omega_A}$$

Take derivative in time

$$\boxed{\alpha_B = \left(\frac{r_A}{r_B}\right)\alpha_A}$$

(ii) General Motions: Velocities

Relative Velocities

$\vec{r}_A = \vec{r}_B + \vec{r}_{A/B}$

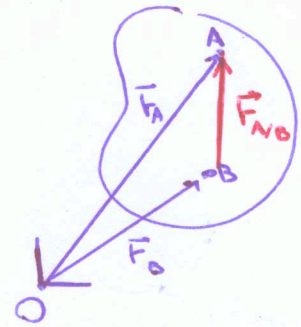

$\Rightarrow \vec{v}_A = \vec{v}_B + \vec{v}_{A/B}$ $\qquad \vec{v}_{A/B} = \dfrac{d\vec{r}_{A/B}}{dt}$

Relate $\vec{v}_{A/B}$ to angular velocity:

$r_{A/B} = |\vec{r}_{A/B}| = \text{constant}$ (rigid body)

$\Rightarrow$ A moves in circular path relative to B

$\Rightarrow v_{A/B} = r_{A/B}\,\omega$ $\rightarrow$ tangent to circular path.

Rolling disk:

"Rolling": velocity of disk relative to the surface is zero at point of contact C $\Rightarrow \vec{v}_C = \vec{0}$

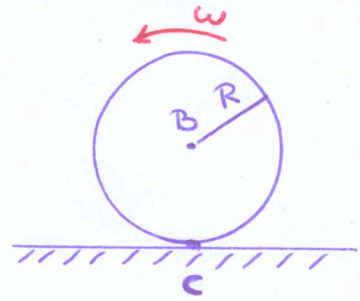

velocity of center of round object rolling $\leftarrow$ $\vec{v}_B = \vec{v}_C + \vec{v}_{B/C} = \vec{0} - v_{B/C}\,\hat{i}$

$$\boxed{\vec{v}_B = -R\omega\,\hat{i}}$$

Angular velocity vector

$\vec{\omega} = \omega\,\hat{k}$ $\rightarrow$ "right-hand rule"

magnitude equal rate of rotation

parallel to instantaneous axis of rotation (assumed z-axis)

$v_{A/B} = |\vec{r}_{A/B}|\sin\beta\,\omega \Rightarrow \vec{v}_{A/B} = \vec{\omega} \times \vec{r}_{A/B}$

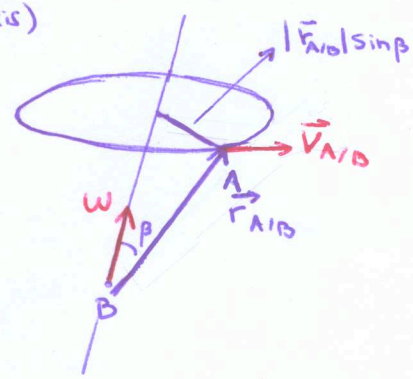

For A and B of a rigid body

$$\Rightarrow \boxed{\vec{v}_A = \vec{v}_B + \underbrace{\vec{\omega} \times \vec{r}_{A/B}}_{\vec{v}_{A/B}}}$$

EX 17.59

Problem 17.59 Determine the velocity of the block and the angular velocity of the small pulley.

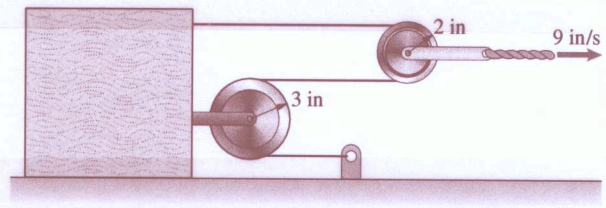

Solution

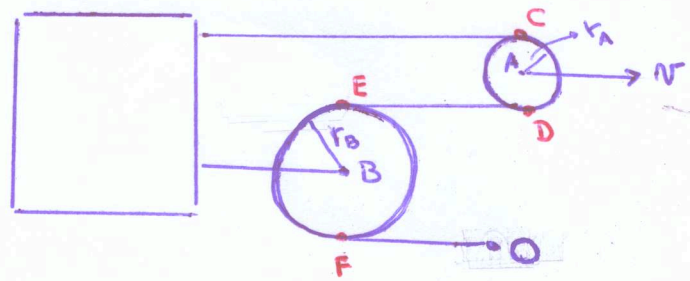

Data: $\vec{V}_O = \vec{0}$; $r_A = 2\,in$

$\vec{V}_A = v\,\hat{i}$; $r_B = 3\,in$

Relative velocities

① $\vec{V}_F = \vec{V}_B + \vec{\omega}_B \times \vec{r}_{F/B}$

② $\vec{V}_E = \vec{V}_B + \vec{\omega}_B \times \vec{r}_{E/B}$

③ $\vec{V}_D = \vec{V}_A + \vec{\omega}_A \times \vec{r}_{D/A}$

④ $\vec{V}_C = \vec{V}_A + \vec{\omega}_A \times \vec{r}_{C/A}$

Constrains

(i) $\vec{V}_F = \vec{V}_O$

(ii) $\vec{V}_E = \vec{V}_D$

(iii) $\vec{V}_C = \vec{V}_B$

unknowns: $v_C, v_D, v_E, v_B, v_F, \omega_A, \omega_B$

7 unknowns and 7 equations

① $\Longrightarrow \quad v_F \hat{i} = v_B \hat{i} + \omega_B \hat{k} \times (-r_B \hat{j})$

$$v_F = v_B + \omega_B r_B$$

② $\Longrightarrow \quad v_E \hat{i} = v_B \hat{i} + \omega_B \hat{k} \times (r_B \hat{j})$

$$v_E = v_B - \omega_B r_B$$

③ $\Longrightarrow \quad v_D \hat{i} = v \hat{i} + \omega_A \hat{k} \times (-r_A \hat{j})$

$$v_D = v + \omega_A r_A$$

④ $\Longrightarrow \quad v_C \hat{i} = v \hat{i} + \omega_A \hat{k} \times (r_A \hat{j})$

$$v_C = v - \omega_A r_A$$

(1') $v_F = v_B + \omega_B r_B$

(2') $v_E = v_B - \omega_B r_B$

(3') $v_D = v + \omega_A r_A$

(4') $v_C = v - \omega_A r_A$

(1') and (i) $\Longrightarrow \quad 0 = v_B + \omega_B r_B \quad \Longrightarrow \quad \boxed{v_B = -\omega_B r_B}$

(2') $\Longrightarrow \quad v_E = -2\omega_B r_B \overset{(ii)}{=} v_D = v + \omega_A r_A \quad (*)$

(4') and (iii) $\Longrightarrow \quad v_B = -\omega_B r_B = v_C = v - \omega_A r_A$

$$\Longrightarrow \quad -\omega_B r_B = v - \omega_A r_A \qquad (**)$$

we obtained

$$(*) \Rightarrow \quad -2\omega_B r_B = v + \omega_A r_A \quad (*')$$

$$(**) \Rightarrow \quad -2\omega_B r_B = 2v - 2\omega_A r_A$$

$$(*) - (**) \Rightarrow \quad 0 = -v + 3\omega_A r_A \Rightarrow \boxed{\omega_A = \frac{v}{3r_A}}$$

$$\boxed{\omega_A = 1.5 \text{ rad/s}}$$

$$-2\omega_B r_B = v + \frac{v}{3\cancel{r_A}}\cancel{r_A} = \frac{4}{3}v$$

$$\boxed{\omega_B = -\frac{2v}{3r_B}} \rightarrow \boxed{\omega_B = -2 \text{ rad/s}}$$

$$\boxed{v_B = -\omega_B r_B = 6 \text{ in/s}}$$

EX 17.78

Problem 17.78* Bar AB rotates at 12 rad/s in the clockwise direction. Determine the angular velocities of bars BC and CD.

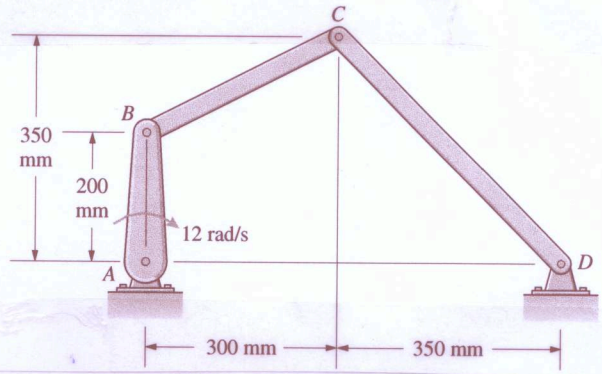

Solution

Data: $h_1 = 0.2\,m$

$h_2 = 0.35\,m$

$l_1 = 0.3\,m$

$l_2 = 0.35\,m$

$\omega_{AB} = 12\ rad/s$

$\vec{V}_A = \vec{0}\ ;\ \vec{V}_D = \vec{0}$

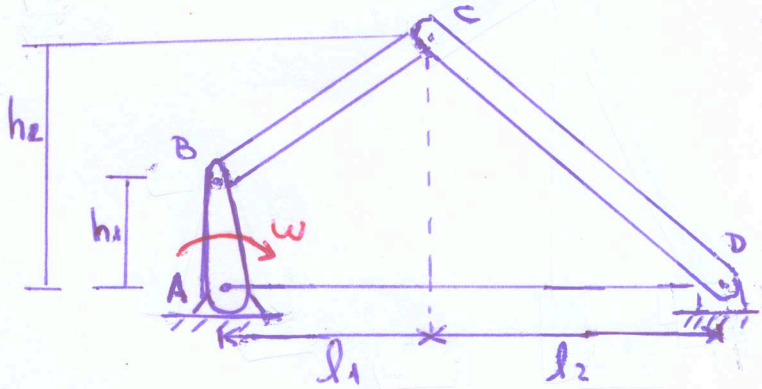

Relative velocities

(1) $\vec{V}_B = \underset{\vec{0}}{\vec{V}_A} + \vec{\omega}_{AB} \times \vec{r}_{B/A} = \underset{\text{clockwise}}{-\omega_{AB}\hat{k}} \times h_1\hat{j} = \omega_{AB} h_1 \hat{i}$

(2) $\vec{V}_C = \underset{\vec{0}}{\vec{V}_D} + \vec{\omega}_{CD} \times \vec{r}_{C/D} = \omega_{CD}\hat{k} \times (-l_2\hat{i} + h_2\hat{j})$

$= -\omega_{CD} h_2 \hat{i} - \omega_{CD} l_2 \hat{j}$

(3) $\vec{V}_C = \vec{V}_B + \vec{\omega}_{BC} \times \vec{r}_{C/B} = \vec{V}_B + \omega_{BC}\hat{k} \times (l_1\hat{i} + (h_2 - h_1)\hat{j})$

$= (\omega_{AB} h_1 - \omega_{BC}(h_2 - h_1))\hat{i} + \omega_{BC} l_1 \hat{j}$

By components:

(1) $\Rightarrow$ $$\boxed{v_B = \omega_{AB} h_1} \qquad (i)$$

(2) = (3) $\Rightarrow$ $$-\omega_{CD} h_2 = \omega_{AB} h_1 - \omega_{BC}(h_2 - h_1) \qquad (ii)$$

$$-\omega_{CD} l_2 = \omega_{BC} l_1 \qquad (iii)$$

(iii) $\Rightarrow$ $$\boxed{\omega_{BC} = -\frac{l_2}{l_1}\omega_{CD}}$$

(ii) $\Rightarrow$ $$-\omega_{CD} h_2 = \omega_{AB} h_1 + \omega_{CD}\frac{l_2}{l_1}(h_2 - h_1)$$

$$-\omega_{AB} h_1 = \omega_{CD}\left(\frac{l_2}{l_1}(h_2 - h_1) + h_2\right)$$

$$\omega_{CD} = -\omega_{AB}\frac{h_1}{\frac{l_2}{l_1}(h_2 - h_1) + h_2}$$

$$\boxed{\omega_{CD} = -4.57 \text{ rad/s}} \longrightarrow \text{clockwise}$$

$$\omega_{BC} = -\frac{l_2}{l_1}\omega_{CD}$$

$$\boxed{\omega_{BC} = -\omega_{AB}\frac{\frac{l_2}{l_1} h_1}{\frac{l_2}{l_1}(h_2 - h_1) + h_2}}$$

$$\boxed{\omega_{BC} = -5.33 \text{ rad/s}} \longrightarrow \text{clock wise}$$

EX 17.75

Problem 17.75 Bar *AB* rotates at 6 rad/s in the clockwise direction. Use instantaneous centers to determine the angular velocity of bar *BC*.

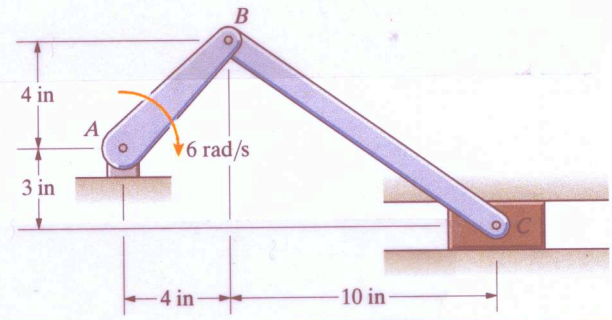

Solution

Data:

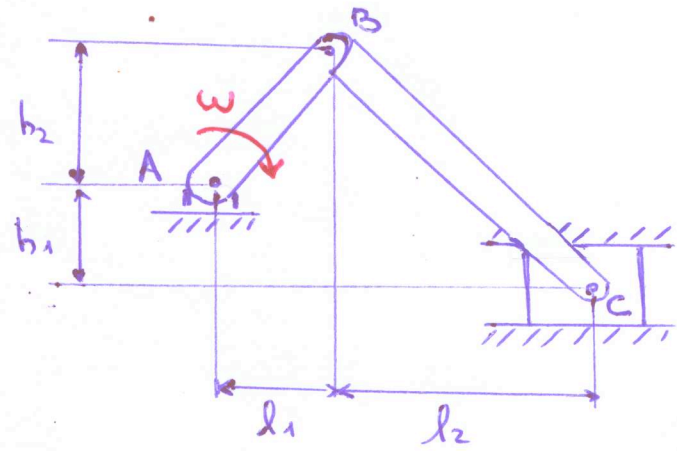

$h_1 = 3\,in \qquad h_2 = 4\,in$

$l_1 = 4\,in \qquad l_2 = 10\,in$

$\omega = 6\,rad/s$

$\vec{V}_A = \vec{0} \qquad \vec{V}_C = V_C\,\hat{i}$

Relative velocities

(1) $\vec{V}_B = \underset{\vec{0}}{\vec{V}_A} + \vec{\omega}_{AB} \times \vec{r}_{B/A} = -\omega\,\hat{k} \times (l_1\,\hat{i} + h_2\,\hat{j})$

$$\boxed{\vec{V}_B = \omega h_2\,\hat{i} - \omega l_1\,\hat{j}}$$

(2) $\vec{V}_C = \vec{V}_B + \vec{\omega}_{BC} \times \vec{r}_{C/B} = (\omega h_2\,\hat{i} - \omega l_1\,\hat{j}) + \omega_{BC}\,\hat{k} \times (l_2\,\hat{i} - (h_1+h_2)\,\hat{j})$

$= (\omega h_2 + \omega_{BC}(h_1+h_2))\,\hat{i} + (\omega_{BC} l_2 - \omega l_1)\,\hat{j}$

$= V_C\,\hat{i}$

$\hat{j}$ component $\Rightarrow \omega_{BC} l_2 - \omega l_1 = 0 \Rightarrow \boxed{\omega_{BC} = \omega \dfrac{l_1}{l_2}}$

$\hat{i}$ component $\Rightarrow V_C = \omega h_2 + \omega_{BC}(h_1+h_2) \Rightarrow \boxed{\omega_{BC} = 2.4\,rad/s}$

$\boxed{V_C = 2.4\,rad/s} \qquad \boxed{V_C = \omega\left(h_2 + \dfrac{l_1}{l_2}(h_1+h_2)\right)}$

(iii) Instantaneous Centers

A point of a rigid body whose velocit is zero at a given instant is called an instantaneous center.

How to find an istantaneous center a rigid body?

- Take two points A and B of a rigid body with directions of motion not parallel.
- Draw lines through A and B perpendicular to directions of motion
- Point C of intersectio is the instantaneous center.

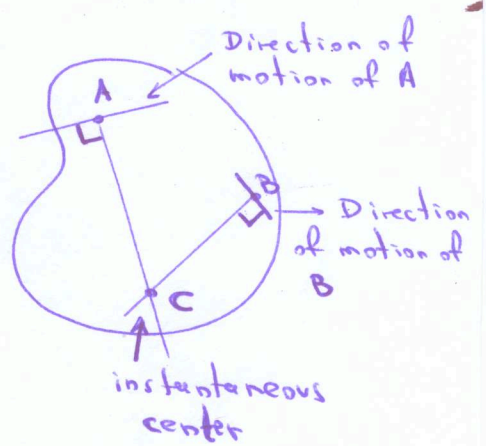

Proof: $\bar{V}_c = \bar{V}_A + \bar{\omega} \times \bar{r}_{c/A}$

$\bar{\omega} \perp$ to plane of motion

$\bar{r}_{c/A} \perp$ to $\bar{V}_A$

$\Rightarrow \bar{\omega} \times \bar{r}_{c/A} \parallel \bar{V}_A \Rightarrow \bar{V}_c \parallel \bar{V}_A$

Similarly

$\vec{V}_c = \vec{V}_B + \bar{\omega} \times \bar{r}_{c/B} \parallel \bar{V}_c$

Then either $\vec{V}_A \parallel \vec{V}_B \rightarrow$ no point of intersection

or $\vec{V}_c = \vec{0}$ (no instantaneous center)

Note: Instantaneous center may not be inside rigid body

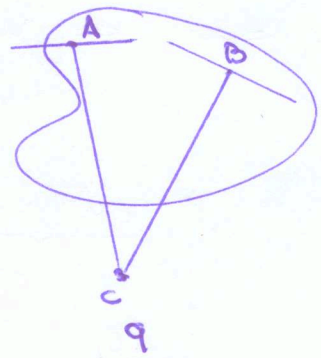

EX 17.75

Problem 17.75 Bar *AB* rotates at 6 rad/s in the clockwise direction. Use instantaneous centers to determine the angular velocity of bar *BC*.

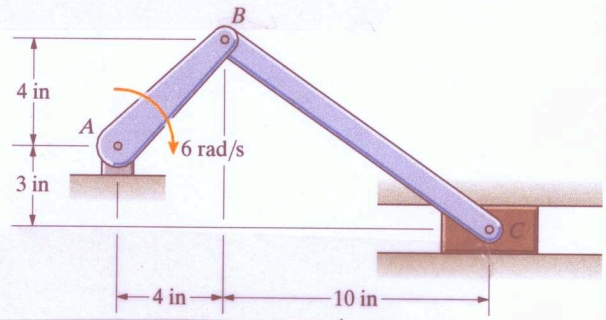

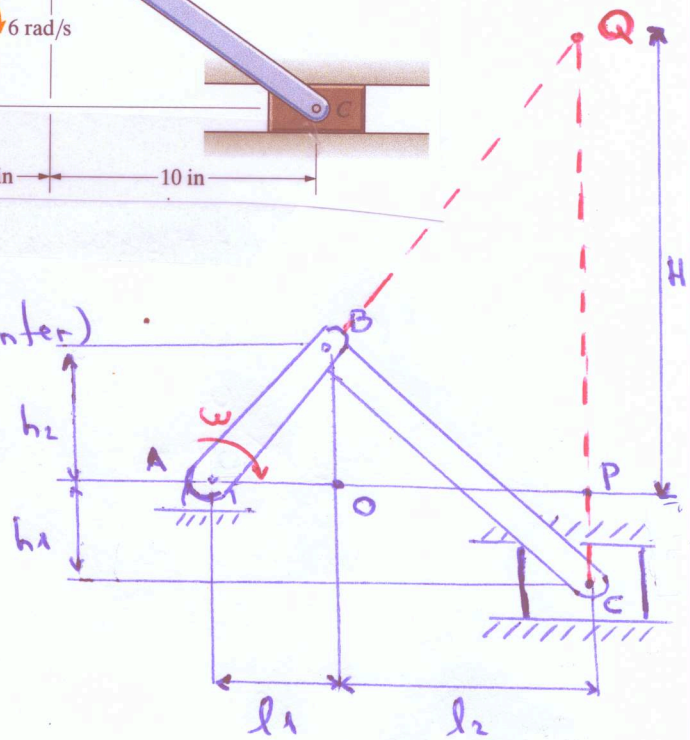

Solution (with istantaneous center)

Data:

$h_1 = 3\,in \qquad h_2 = 4\,in$

$l_1 = 4\,in \qquad l_2 = 10\,in$

$\omega = 6\ rad/s$

$\vec{V}_A = \vec{0} \qquad \vec{V}_C = v_C\,\hat{i}$

Find instantaneous center of bar BC

Using similar triangles: ΔAOB and ΔAPQ

$$\frac{l_1}{h_2} = \frac{l_1 + l_2}{H} \Rightarrow \boxed{H = h_2\left(\frac{l_1 + l_2}{l_1}\right)}$$

Relative velocities

(1) $\vec{V}_B = \underset{\vec{0}}{\vec{V}_A} + \vec{\omega}_{AB} \times \vec{r}_{B/A} = -\omega\hat{k} \times (l_1\hat{i} + h_2\hat{j})$

$= \omega h_2\hat{i} - \omega l_1\hat{j}$

(2) $\vec{V}_B = \underset{\vec{0}}{\vec{V}_Q} + \vec{\omega}_{BC} \times \vec{r}_{B/Q} = \omega_{BC}\hat{k} \times (-l_2\hat{i} - (H - h_2)\hat{j})$

$= \omega_{BC}(H - h_2)\hat{i} - \omega_{BC} l_2\hat{j}$

Compare $\hat{i}$ and $\hat{j}$ components from (1) and (2)

$\hat{j}$ component $\quad -\omega l_1 = -\omega_{BC}\, l_2 \quad \Rightarrow \quad \boxed{\omega_{BC} = \omega \frac{l_1}{l_2}}$

(same result as before)

what about $\hat{i}$ components?

$$\omega h_2 = \omega_{BC}\,(H - h_2) = \omega_{BC}\left(h_2\left(\frac{l_1 + l_2}{l_1}\right) - h_2\right)$$

$$= \omega_{BC}\, h_2\left(\cancel{1} + \frac{l_2}{l_1} \cancel{-1}\right)$$

$$\Rightarrow \quad \omega_{BC} = \omega \frac{l_1}{l_2} \quad \checkmark$$

<u>Note</u>: We didn't use an equation for $\vec{v}_c$
However the information about the horizontal motion of C was used to find the instantaneous center Q.

(iv) General Motions : Accelerations

$$\vec{v}_A = \vec{v}_B + \vec{v}_{A/B}$$

$$\Longrightarrow \vec{a}_A = \vec{a}_B + \vec{a}_{A/B}$$

$$\vec{a}_{A/B} = \frac{d\vec{v}_{A/B}}{dt} = \frac{d}{dt}\left(\vec{\omega} \times \vec{r}_{A/B}\right) = \frac{d\vec{\omega}}{dt} \times \vec{r}_{A/B} + \vec{\omega} \times \frac{d\vec{r}_{A/B}}{dt}$$

$$\boxed{\vec{a}_{A/B} = \vec{\alpha} \times \vec{r}_{A/B} + \vec{\omega} \times \left(\vec{\omega} \times \vec{r}_{A/B}\right)} \qquad \vec{\alpha} = \frac{d\vec{\omega}}{dt}$$

$$\vec{\alpha} = \alpha \hat{k} \qquad \alpha = \frac{d\omega}{dt}$$

<u>Note</u> : On a planar motion

$$\hat{k} \times \hat{e}_r = \hat{e}_\theta$$

$$\hat{k} \times \hat{e}_\theta = -\hat{e}_r$$

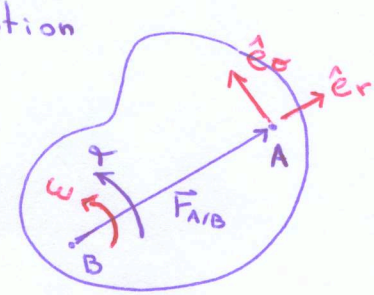

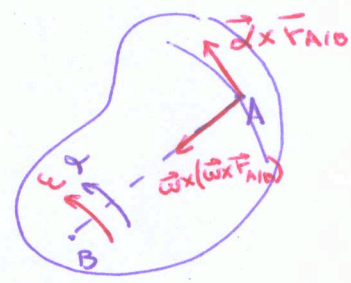

$$\Longrightarrow \vec{\omega} \times \left(\vec{\omega} \times \vec{r}_{A/B}\right) = -\omega^2 |\vec{r}_{A/B}| \hat{e}_r = -\omega^2 \vec{r}_{A/B}$$

<u>Summary</u>

$$\begin{cases} \vec{v}_A = \vec{v}_B + \underbrace{\vec{\omega} \times \vec{r}_{A/B}}_{\vec{v}_{A/B}} \\[2ex] \vec{a}_A = \vec{a}_B + \underbrace{\vec{\alpha} \times \vec{r}_{A/B} + \vec{\omega} \times \left(\vec{\omega} \times \vec{r}_{A/B}\right)}_{\vec{a}_{A/B}} \\[2ex] \vec{a}_A = \vec{a}_B + \vec{\alpha} \times \vec{r}_{A/B} - \omega^2 \vec{r}_{A/B} \end{cases}$$

tangential

normal

$\longleftarrow$ On planar motion

EX 17.98

Problem 17.98 The angular velocity $\omega_{AB} = 6$ rad/s. If the acceleration of the slider C is zero at the instant shown, what is the angular acceleration α_{AB}?

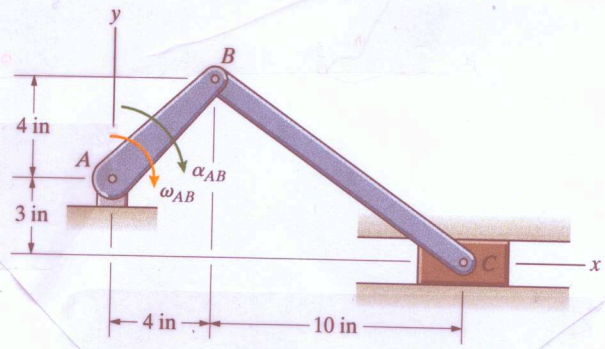

Solution

Data:

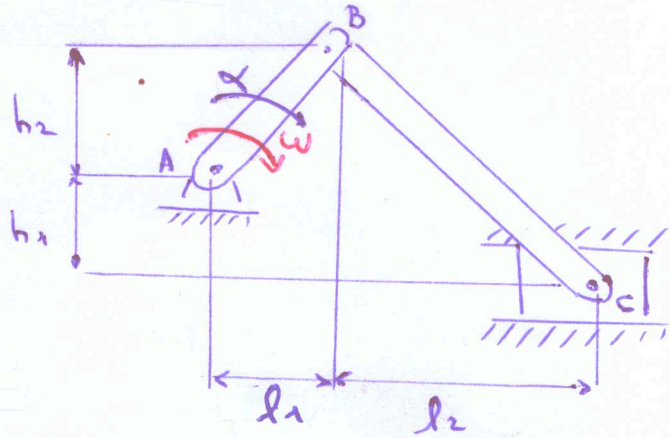

$h_1 = 3$ in $\quad h_2 = 4$ in

$l_1 = 4$ in $\quad l_2 = 10$ in

$\omega = 6$ rad/s

$\vec{v}_A = \vec{0} \quad \vec{v}_C = v_C \hat{i} \quad \vec{a}_C = \vec{0}$

velocity analysis

We found $\boxed{\omega_{BC} = \omega \dfrac{l_1}{l_2}}$.

acceleration analysis

(1) $\vec{a}_B = \underset{\vec{0}}{\vec{a}_A} + \vec{\alpha}_{AB} \times \vec{r}_{B/A} - \omega_{AB}^2 \vec{r}_{B/A}$

$= -\alpha_{AB} \hat{k} \times (l_1 \hat{i} + h_2 \hat{j}) - \omega^2 (l_1 \hat{i} + h_2 \hat{j})$

$= (\alpha_{AB} h_2 - \omega^2 l_1) \hat{i} - (\alpha_{AB} l_1 + \omega^2 h_2) \hat{j}$

(2) $\vec{a}_C = \vec{a}_B + \vec{\alpha}_{BC} \times \vec{r}_{C/B} - \omega_{BC}^2 \vec{r}_{C/B}$

$= \vec{a}_B + \alpha_{BC} \hat{k} \times (l_2 \hat{i} - (h_1 + h_2) \hat{j}) - \omega_{BC}^2 (l_2 \hat{i} - (h_1 + h_2) \hat{j})$

$= \vec{a}_B + (\alpha_{BC}(h_1 + h_2) - \omega_{BC}^2 l_2) \hat{i} + (\alpha_{BC} l_2 + \omega_{BC}^2 (h_1 + h_2)) \hat{j}$

Substitute $\vec{a}_D$ and compare components

$\hat{i}$ components: $0 = \alpha_{AB} h_2 - \omega^2 l_1 + \alpha_{DC}(h_1+h_2) - \omega_{DC}^2 l_2$

$\hat{j}$ components: $0 = -(\alpha_{AB} l_1 + \omega^2 h_2) + \alpha_{DC} l_2 + \omega_{DC}^2 (h_1+h_2)$

$$\Longrightarrow \quad h_2 \alpha_{AB} + (h_1+h_2)\alpha_{DC} = \omega^2 l_1 + \omega_{DC}^2 l_2 \qquad (*)$$

$$-l_1 \alpha_{AB} + l_2 \alpha_{DC} = \omega^2 h_2 - \omega_{DC}^2 (h_1+h_2) \qquad (**)$$

$l_1 (*) + h_2 (**)$:

$$\left(l_1(h_1+h_2) + h_2 l_2\right)\alpha_{DC} = \omega^2(l_1^2+h_2^2) + \omega_{DC}^2\left(l_1 l_2 - h_2(h_1+h_2)\right)$$

$$\boxed{\alpha_{DC} = \frac{\omega^2(l_1^2+h_2^2) + \omega_{DC}^2\left(l_1 l_2 - h_2(h_1+h_2)\right)}{l_1(h_1+h_2) + h_2 l_2}}$$

$$\boxed{\alpha_{DC} = 18.0 \text{ rad/s}^2}$$

$l_2 (*) - (h_1+h_2)(**)$:

$$\left(l_2 h_2 + l_1(h_1+h_2)\right)\alpha_{AB} = \omega^2\left(l_1 l_2 - h_2(h_1+h_2)\right) + \omega_{DC}^2\left((h_1+h_2)^2 + l_2^2\right)$$

$$\boxed{\alpha_{AB} = \frac{\omega^2\left(l_1 l_2 - h_2(h_1+h_2)\right) + \omega_{DC}^2\left((h_1+h_2)^2 + l_2^2\right)}{l_2 h_2 + l_1(h_1+h_2)}}$$

$$\boxed{\alpha_{AB} = 19.0 \text{ rad/s}^2}$$

(v) Sliding Contacts

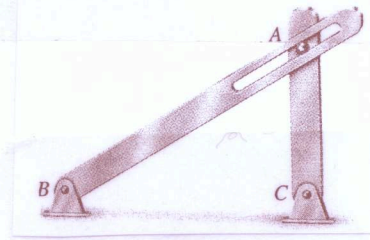

Assume A can translates with respect to B → the distance between A and B is <u>not</u> constant.

Introduce a body-fixed reference frame:

$$\vec{r}_A = \vec{r}_B + \underbrace{x\hat{i} + y\hat{j} + z\hat{k}}_{\vec{r}_{A/B}}$$

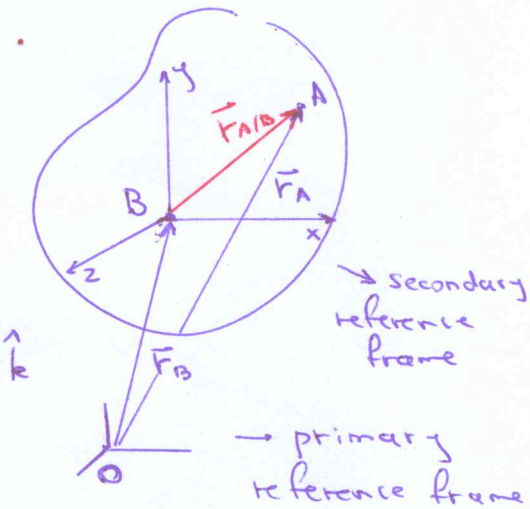

Note: $\hat{i}, \hat{j}, \hat{k}$ point to points in rigid body:

$$\frac{d\hat{i}}{dt} = \vec{\omega} \times \hat{i} \; ; \quad \frac{d\hat{j}}{dt} = \vec{\omega} \times \hat{j} \; ; \quad \frac{d\hat{k}}{dt} = \vec{\omega} \times \hat{k}$$

$$\Rightarrow \quad \vec{v}_A = \vec{v}_B + \overbrace{\frac{dx}{dt}\hat{i} + \frac{dy}{dt}\hat{j} + \frac{dz}{dt}\hat{k}}^{\vec{v}_{A\,rel}} + x\frac{d\hat{i}}{dt} + y\frac{d\hat{j}}{dt} + z\frac{d\hat{k}}{dt}$$

$$\boxed{\vec{v}_A = \vec{v}_B + \underbrace{\vec{v}_{A\,rel} + \vec{\omega} \times \vec{r}_{A/B}}_{\vec{v}_{A/B}}}$$

$$\vec{a}_A = \vec{a}_B + \frac{d}{dt}(\vec{v}_{A\,rel}) + \frac{d}{dt}(\vec{\omega} \times \vec{r}_{A/B})$$

$$= \vec{a}_B + \left(\frac{d^2x}{dt^2}\hat{i} + \frac{d^2y}{dt^2}\hat{j} + \frac{d^2z}{dt^2}\hat{k}\right) + \overbrace{\left(\frac{dx}{dt}\frac{d\hat{i}}{dt} + \frac{dy}{dt}\frac{d\hat{j}}{dt} + \frac{dz}{dt}\frac{d\hat{k}}{dt}\right)}^{\vec{\omega} \times \vec{v}_{A\,rel}}$$

$$+ \frac{d\vec{\omega}}{dt} \times \vec{r}_{A/B} + \underbrace{\vec{\omega} \times \vec{v}_{A/B}}_{(\vec{v}_{A\,rel} + \vec{\omega} \times \vec{r}_{A/B})}$$

$$\boxed{\vec{a}_A = \vec{a}_B + \underbrace{\vec{a}_{A\,rel} + 2\vec{\omega} \times \vec{v}_{A\,rel} + \vec{\alpha} \times \vec{r}_{A/B} + \vec{\omega} \times (\vec{\omega} \times \vec{r}_{A/B})}_{\vec{a}_{A/B}}}$$

<u>Note</u>: We can use this result for moving reference frames.

EX 17.132

Problem 17.132 Block A slides up the inclined surface at 2 ft/s. Determine the angular velocity of bar AC and the velocity of point C.

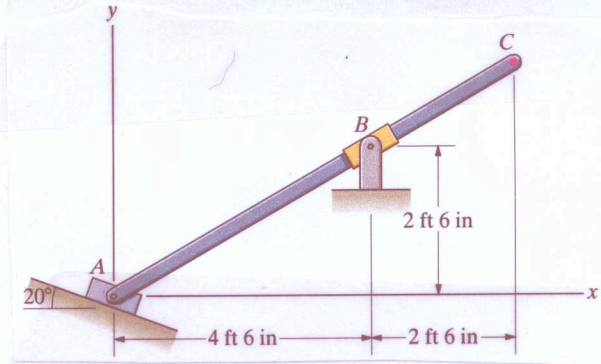

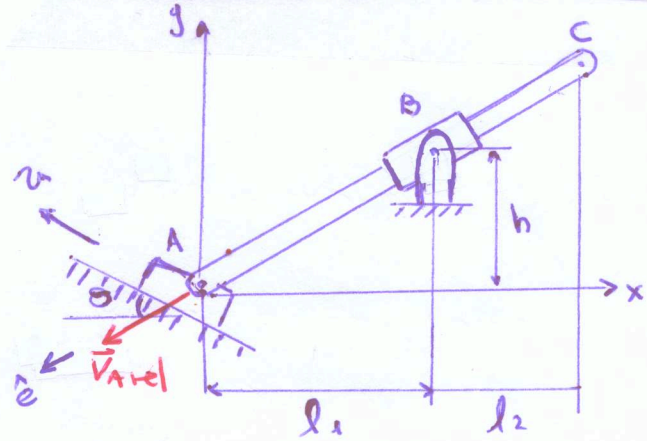

Solution

Data: $l_1 = 4.5\,ft$ $\quad v = 2\,ft/s$

$l_2 = 2.5\,ft$

$h = 2.5\,ft$

$\vec{V}_A = -v\cos\theta\,\hat{i} + v\sin\theta\,\hat{j}$

$\vec{a}_A = \vec{0}$ $\quad \omega_{AC} = \omega_{AB}$

$\vec{V}_B = \vec{0}$

Relative velocities

$$\vec{V}_A = \underset{\vec{0}}{\vec{V}_B} + \vec{V}_{A\,rel} + \vec{\omega}_{AB} \times \vec{r}_{A/B}$$

$$\vec{V}_{A\,rel} = v_{A\,rel}\,\hat{e} \quad ; \quad \hat{e} = \frac{-l_1\hat{i} - h\hat{j}}{\sqrt{l_1^2 + h^2}}$$

$$-v\cos\theta\,\hat{i} + v\sin\theta\,\hat{j} = v_{A\,rel}\left(\frac{-l_1\hat{i} - h\hat{j}}{\sqrt{l_1^2+h^2}}\right) + \omega_{AC}\hat{k} \times (-l_1\hat{i} - h\hat{j})$$

unknowns: $v_{A\,rel}$, ω_{AC}

$\hat{i}$ component: $-v\cos\theta = -v_{A\,rel}\dfrac{l_1}{\sqrt{l_1^2+h^2}} + \omega_{AC}h$ $\quad (*)$

$\hat{j}$ component: $v\sin\theta = -v_{A\,rel}\dfrac{h}{\sqrt{l_1^2+h^2}} - \omega_{AC}l_1$ $\quad (**)$

$l_1(*) + h(**)$:

$$-l_1 v \cos\sigma + h v \sin\sigma = -v_{Arel} \frac{l_1^2 + h^2}{\sqrt{l_1^2 + h^2}}$$

$$\boxed{v_{Arel} = \frac{v\,(h \sin\sigma - l_1 \cos\sigma)}{\sqrt{l_1^2 + h^2}}}$$

$h(*) - l_1(**)$:

$$-h v \cos\sigma - l_1 v \sin\sigma = h^2 \omega_{AC} + l_1^2 \omega_{AC}$$

$$\boxed{\omega_{AC} = -v \frac{(h \cos\sigma + l_1 \sin\sigma)}{h^2 + l_1^2}}$$

(II) Planar Dynamics of Rigid Bodies

Momentum principles for systems of particles

(1) Force-Linear Momentum Principle

Assume a system of N particles

By Newton's 2nd law for particle i:

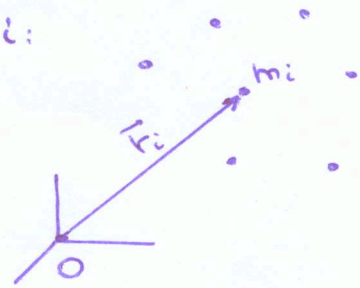

$$\sum_j \vec{f}_{ij} + \vec{f}_i^{\,E} = \frac{d}{dt}(m_i \vec{v}_i)$$

Sum over $i = 1$ to N

$$(*) \qquad \sum_i \sum_j \vec{f}_{ij} + \sum \vec{f}_i^{\,E} = \sum_i \frac{d}{dt}(m_i \vec{v}_i)$$

Now, by Newton's 3rd law $\vec{f}_{ij} = -\vec{f}_{ji}$

$$\Rightarrow \sum_i \sum_j \vec{f}_{ij} = \frac{1}{2} \sum_i \sum_j \vec{f}_{ij} + \frac{1}{2} \sum_j \sum_i \vec{f}_{ji}$$

$$= \frac{1}{2} \sum_i \sum_j \left(\vec{f}_{ij} + \vec{f}_{ji}\right) = \vec{0}$$

Let $\sum \vec{F} = \sum_i \vec{f}_i^{\,E}$ = sum of external forces

$m = \sum_i m_i$ = total mass

$\vec{r} = \dfrac{\sum_i \vec{r}_i m_i}{m}$ = center of mass

Assuming masses m_i constant $\Rightarrow m\vec{v} = m\dfrac{d\vec{r}}{dt} = \sum_i m_i \vec{v}_i$

$$\Longrightarrow \boxed{\sum \vec{F} = \frac{d}{dt}(m\vec{v})} \xrightarrow{m \text{ constant}} \boxed{\sum \vec{F} = m\vec{a}}$$

(2) Moment- Angular Momentum Principle

$\vec{r}_i = \vec{r} + \vec{R}_i$

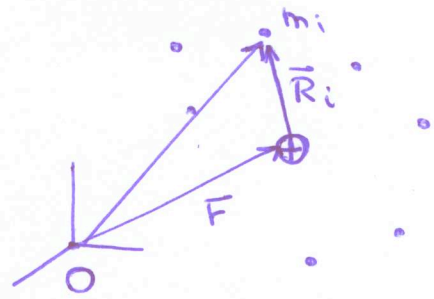

- Take cross product of $\vec{r}_i$ with Newton's 2nd law for particle i
- Sum over $i = 1$ to N

$$\sum_i \sum_j \vec{r}_i \times \vec{f}_{ij} + \sum_i \vec{r}_i \times \vec{f}_i^{\,E} = \sum_i \vec{r}_i \times \frac{d}{dt}(m_i \vec{v}_i)$$

Now, (i) $\frac{d}{dt}(\vec{r}_i \times m_i \vec{v}_i) = \underbrace{\frac{d\vec{r}_i}{dt}}_{\vec{v}_i} \times m_i \vec{v}_i + \vec{r}_i \times \frac{d}{dt}(m_i \vec{v}_i)$ $\quad \vec{0}$

(ii) Assume $\vec{f}_{ij} \parallel \vec{r}_i - \vec{r}_j$

$$\Rightarrow \sum_i \sum_j \vec{r}_i \times \vec{f}_{ij} = \frac{1}{2} \sum_i \sum_j \vec{r}_i \times \vec{f}_{ij} + \frac{1}{2} \sum_j \sum_i \vec{r}_j \times \vec{f}_{ji}$$

$$\underset{\text{Newton's 3rd law}}{=} \frac{1}{2} \sum_i \sum_j (\vec{r}_i - \vec{r}_j) \times \vec{f}_{ij} = \vec{0}$$

Let $\sum \vec{M}_O = \sum_i \vec{r}_i \times \vec{f}_i^{\,E}$ = sum of moments about O

$$\Rightarrow \sum \vec{M}_O = \frac{d}{dt}\left(\sum_i \vec{r}_i \times m_i \vec{v}_i\right)$$

$$\boxed{\sum \vec{M}_O = \frac{d}{dt} \vec{H}_O}$$

$$\vec{H}_o = \sum_i \vec{r}_i \times m_i \frac{d\vec{r}_i}{dt}$$

$$= \sum_i (\vec{r} + \vec{R}_i) \times m_i \frac{d}{dt}(\vec{r} + \vec{R}_i)$$

$$= \vec{r} \times \left(\sum_i m_i\right)\frac{d\vec{r}}{dt} + \vec{r} \times \frac{d}{dt}\left(\cancelto{\vec{0}}{\sum_i m_i \vec{R}_i}\right)$$

$$+ \left(\cancelto{\vec{0}}{\sum_i m_i \vec{R}_i}\right) \times \frac{d\vec{r}}{dt} + \sum_i \vec{R}_i \times m_i \frac{d\vec{R}_i}{dt}$$

$$\boxed{\vec{H}_o = \vec{r} \times m\vec{v} + \vec{H}}$$

Angular momentum about o

angular momentum due to velocity of center of mass

angular momentum about center of mass

Planar equations of motion of rigid body

(1) Motion of center of mass

$$\sum \vec{F} = m\,\vec{a}$$ ← Force-Linear Momentum Principle

(2) Angular Motion

(i) Rotation about fixed axis

Rigid body: $\frac{d\vec{r}_i}{dt} = \vec{\omega} \times \vec{r}_i = \omega \hat{k} \times \vec{r}_i$

$$\Rightarrow \sum M_o = \sum \vec{M}_o \cdot \hat{k}$$

$$= \frac{d\vec{H}_o}{dt} \cdot \hat{k} = \frac{d}{dt}(\vec{H}_o \cdot \hat{k})$$

$$= \frac{dH_o}{dt}$$

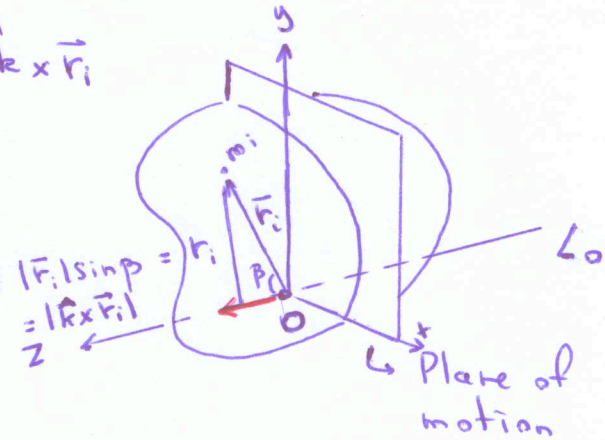

$$H_o = \sum_i \left[\vec{r}_i \times m_i \frac{d\vec{r}_i}{dt}\right] \cdot \hat{k} = \sum_i m_i \hat{k} \cdot \left[\vec{r}_i \times (\omega \hat{k} \times \vec{r}_i)\right]$$

$$= \sum_i m_i |\hat{k} \times \vec{r}_i|^2 \omega = \sum_i m_i r_i^2 \omega$$

$\vec{u} \cdot (\vec{v} \times \vec{w}) = (\vec{u} \times \vec{v}) \cdot \vec{w}$

↳ perpendicular distance from L_o to m_i

$$\boxed{H_o = I_o \omega}$$

$I_o = \sum_i m_i r_i^2$ = moment of inertia

$$\boxed{\sum M_o = I_o \alpha}$$

$$\boxed{I_o = \int_m r^2\, dm}$$

(2) General Planar Motion

$$\frac{d\vec{R}_i}{dt} = \vec{\omega} \times \vec{R}_i = \omega \hat{k} \times \vec{R}_i$$

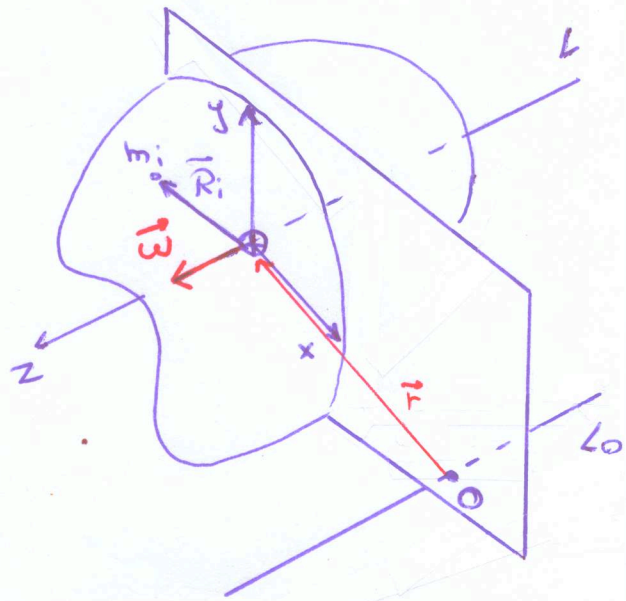

$$\sum M_o = \sum \vec{M}_o \cdot \hat{k}$$

$$= \frac{d}{dt}\vec{H}_o \cdot \hat{k}$$

$$= \frac{d}{dt}(\vec{r} \times m\vec{v}) \cdot \hat{k} + \frac{d}{dt}\vec{H} \cdot \hat{k}$$

$$= \underbrace{\cancel{\left(\frac{d\vec{r}}{dt} \times m\vec{v}\right)}}_{\vec{0}} \cdot \hat{k} + (\vec{r} \times m\vec{a}) \cdot \hat{k}$$

$$+ \frac{dH}{dt}$$

$$H = \vec{H} \cdot \hat{k} = \sum_i \vec{R}_i \times m_i \frac{d\vec{R}_i}{dt} = \sum_i \underbrace{\left[\vec{R}_i \times m_i (\vec{\omega} \times \vec{R}_i)\right] \cdot \hat{k}}$$

$$= m_i \omega \hat{k} \cdot [\vec{R}_i \times (\hat{k} \times \vec{R}_i)]$$

$$= \vec{U} \cdot (\vec{V} \times \vec{W}) = (\vec{U} \times \vec{V}) \cdot \vec{W}$$

$$m_i \omega \underbrace{|\hat{k} \times \vec{R}_i|}_{r_i}{}^2$$

$r_i \rightarrow$ perpendicular distance from L to ith particle

$$H = \sum_i m_i r_i^2 \omega = I\omega$$

$$\sum M_o = (\vec{r} \times m\vec{a}) \cdot \hat{k} + \frac{dH}{dt}$$

$$\boxed{\sum M_o = (\vec{r} \times m\vec{a}) \cdot \hat{k} + I\alpha}$$

If o coincides with center of mass $\vec{r} = \vec{0}$

$$\boxed{\sum M = I\alpha}$$

EX 18.9

Problem 18.9 The 10-lb bar is on a smooth horizontal table. The figure shows the bar viewed from above. Its moment of inertia about the center of mass is $I = 0.8$ slug-ft^2. The bar is stationary when the force $F = 5$ lb is applied in the direction parallel to the y axis. At that instant, determine

(a) the acceleration of the center of mass, and
(b) the acceleration of point A.

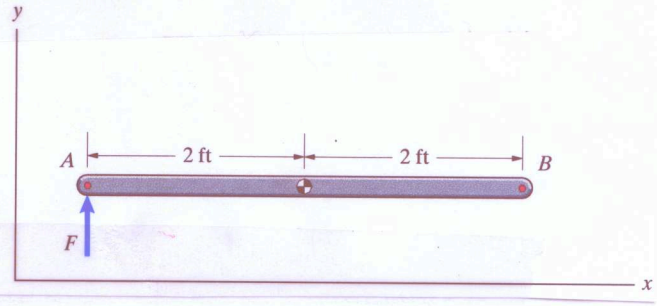

Solution

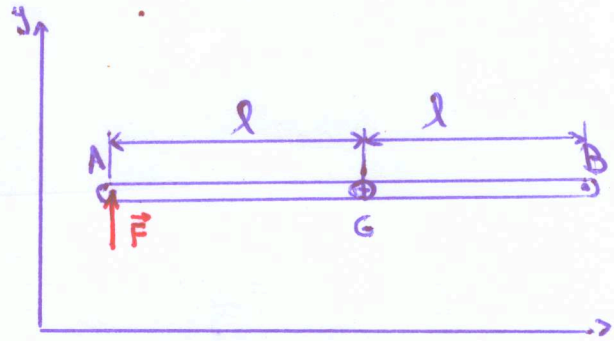

Data: $I = 0.8$ slug ft^2 $\quad W = 10$ lb

$F = 5$ lb $\quad l = 2$ ft

stationary bar

Motion of center of mass

$$\sum F_y = F = m a_G$$

$$a_G = \frac{F}{m} = \frac{5\,\text{lb}}{\left(\frac{10\,\text{lb}}{32.2\,\text{ft/s}^2}\right)} = 16.2\ \text{ft/s}^2$$

$$\boxed{\vec{a}_G = 16.2\,\hat{j}\ \text{ft/s}^2}$$

Angular Motion

$$\sum M_G = (\vec{r}_F \times \vec{F})\cdot\hat{k} = (-l\hat{i} \times F\hat{j})\cdot\hat{k} = (-lF\hat{k})\cdot\hat{k} = -lF$$

about center of mass

$$= I\alpha \implies \boxed{\alpha = -\frac{lF}{I}} \quad \boxed{\alpha = -12.5\ \text{rad/s}^2}$$

Use kinematics (rigid body)

$$\vec{a}_A = \vec{a}_G + \vec{\alpha}\times\vec{r}_{A/G} + \vec{\omega}\times(\cancel{\vec{\omega}}\times\vec{r}_{A/G}) \Leftarrow \vec{\omega} = \vec{0}$$

$$= a_G\hat{j} + \alpha\hat{k}\times(-l\hat{i}) = \boxed{41.2\,\hat{j}\ \text{ft/s}^2}$$

EX 18.36

Problem 18.36 The radius of the pulley is $R = 100$ mm and its moment of inertia is $I = 0.1$ kg-m^2. The mass $m = 5$ kg. The spring constant is $k = 135$ N/m. The system is released from rest with the spring unstretched. At the instant when the mass has fallen 0.2 m, determine (a) the angular acceleration of the pulley, and (b) the tension in the rope between the mass and the pulley.

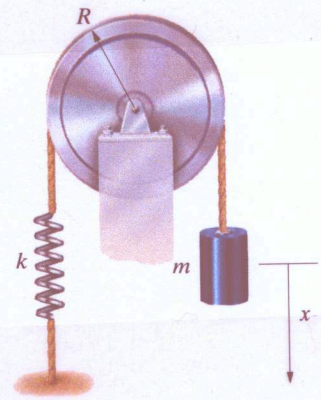

Solution

Data : $R = 0.1$ m

$I = 0.1$ kg m^2

$m = 5$ kg

$k = 135$ N/m

$d = 0.2$ m

Draw Free-body Diagram

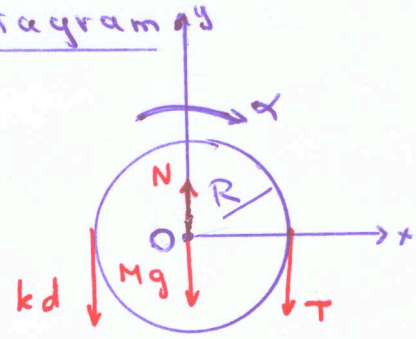

Motion of center of mass (of load)

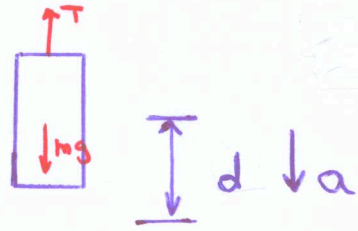

(1) $\sum F_y = T - mg = -ma$

Angular motion (of pulley)

(2) $\sum M_o = -R\hat{i} \times (-kd)\hat{j} + R\hat{i} \times (-T)\hat{j} = I\alpha$

$= kRd - RT = -I\alpha$

clockwise

From kinematics

(3) $a = R\alpha$

Solve

(1) $\Rightarrow$ $T = mg - ma \underset{(3)}{\Rightarrow} T = m(g - R\alpha)$

(2) $\Rightarrow$ $kRd - Rm(g - R\alpha) = -I\alpha$

$kRd - Rmg = -(I + mR^2)\alpha$

$$\boxed{\alpha = \frac{R(mg - kd)}{I + mR^2}}$$

$\boxed{\alpha = 14.7 \text{ rad/s}^2}$

$\boxed{T = m(g - R\alpha) = 41.7 \text{ N}}$

Examples using the Parallel-Axis Theorem

Example 1

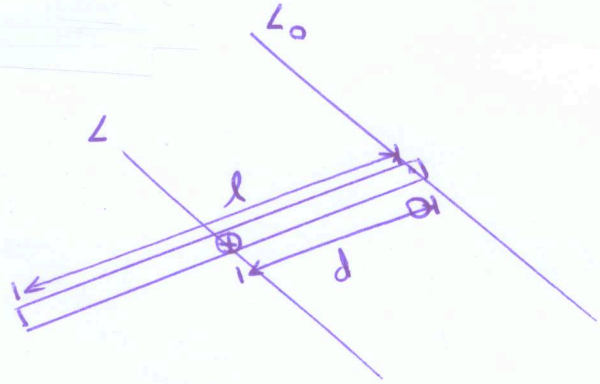

We found $I = \frac{1}{12} m l^2$

Using the parallel-axis theorem:

$$\Longrightarrow \quad I_0 = I + d^2 m = \frac{1}{12} m l^2 + \left(\frac{l}{2}\right)^2 m$$

$$I_0 = \frac{1}{3} m l^2 \quad \checkmark$$

Example 2 : L-shaped object

$m_1 = m_2 = m$

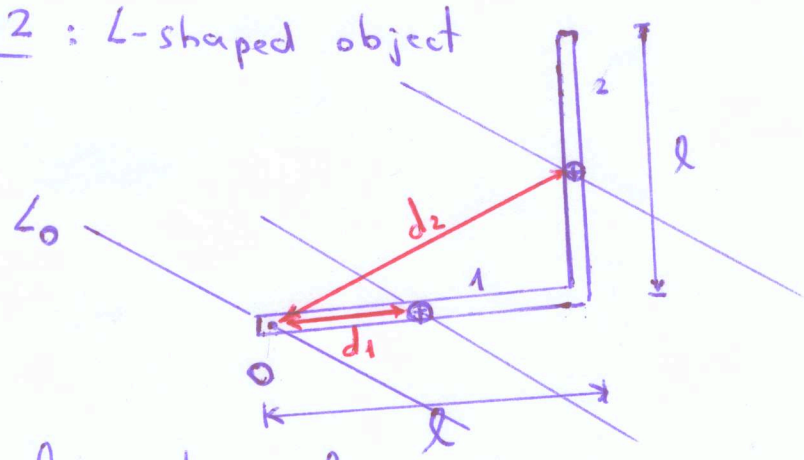

Moment of inertia of slender bar about center of mass

$$I = \frac{1}{12} m l^2$$

Parallel-axis theorem

$$I_0 = (I_0)_1 + (I_0)_2 = I_1 + m_1 d_1^2 + I_2 + m_2 d_2^2$$

moment of inertia of bar 1 about O

moment of inertia of bar 2 about O

moment of inertia of bar 1 about its center of mass

moment of inertia of bar 2 about its center of mass

$$d_1^2 = \left(\frac{l}{2}\right)^2 \qquad d_2^2 = l^2 + \left(\frac{l}{2}\right)^2 = \frac{5}{4} l^2$$

$$I_0 = \left(\frac{1}{12} m l^2 + m \frac{l^2}{4}\right) + \left(\frac{1}{12} m l^2 + m \frac{5}{4} l^2\right)$$

$$= \frac{1}{12} m l^2 \left(1 + 3 + 1 + 15\right) = \frac{20}{12} m l^2$$

$$\boxed{I_0 = \frac{5}{3} m l^2}$$

Example 3 : Composite object

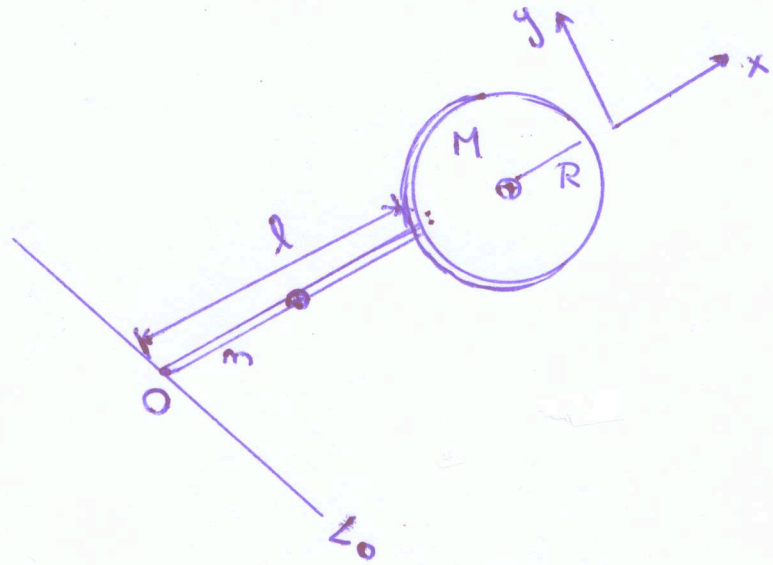

Axis L_0 is perpendicular to bar and disk

We know that $I_{disk} = \frac{1}{2} M R^2$ $\quad I_{bar} = \frac{1}{12} m l^2$

Moment of inertia about O

$$I_O = (I_O)_{bar} + (I_O)_{disk}$$

Using the parallel-axis theorem

$$= \left(I_{bar} + m\left(\frac{l}{2}\right)^2 \right) + \left(I_{disk} + M\,(l+R)^2 \right)$$

$$= \frac{1}{12} m l^2 + m\,\frac{l^2}{4} + \frac{1}{2} M R^2 + M(l+R)^2$$

$$\boxed{I_O = \frac{1}{3} m l^2 + M\left(l^2 + 2lR + \frac{3}{2} R^2 \right)}$$