OAK RIDGE National Laboratory

Reporter

UT-BATTELLE

U.S. Department of Energy Number 116 November 2009

Revolution in target tech

Revolving, solid design proposed for SNS's second target station

The Spallation Neutron Source's proposed second target station, now in the planning stages, won't be a carbon copy of the original liquid mercury target. In fact, if the proposed design is adopted, the second target itself could represent another new and completely different approach to target systems for neutron sources.

Tom McManamy is heading up a design team for a solid target, which will consist of a rotating tantalum-clad tungsten disc. The disc will be struck by the SNS linear accelerator's proton beam, producing the neutrons for research.

Targets made of hard but neutron-rich materials such as tungsten are more common in neutron sources than the SNS's unique liquid mercury target. However, as the power of neutron sources increases, the energetic spallation process requires more cooling water, which can adversely affect the production of neutrons.

In the mid-1990s the original SNS team—of which Tom was a part—chose the mercury target because of the neutron source's high power. The mercury circulates inside the target, similarly spreading the impact of the proton beam that strikes at a rate of 60 pulses per second. No other neutron source has ever operated at the SNS's design peak of 1.4 megawatts.

Because the proposed solid target revolves like a flywheel, the heat generated in the spallation process will be evenly dispatched throughout the target, reducing the need for cooling water.

"The typical rule of thumb in the field has been that above one megawatt, solid targets perform poorly compared with liquid metal targets. We need more cooling water, which lowers the average material density and the production of neutrons," Tom says.

"The rotating target will distribute the heat over a larger area," he says.

The second target source, however, will operate with some significant differences. For example, there will be no pass through the accumulator ring, which sends the 60 pulses per second at a pulse length of 700 nanoseconds.

As currently planned, one pulse in three will be tapped from the linac and sent in long-pulse mode directly to the second target at a rate of 20 pulses per second, and at a pulse length of approximately one millisecond. (One millisecond equals one million nanoseconds, to give an idea of scale.)

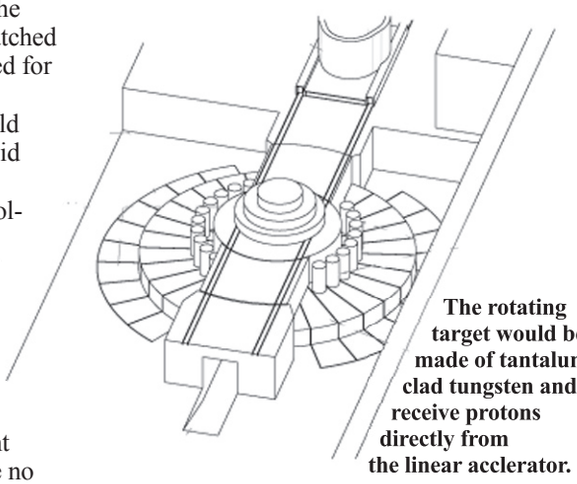

The rotating target would be made of tantalum-clad tungsten and receive protons directly from the linear acclerator.

Not using the accumulator ring results in a much simpler system and, designers expect, will give good reliability. The instruments in the second target station would be optimized for use with the long pulse length. The second

(See TARGET, page 6)

Local landfill haul a big step in central campus cleanup

In a move that symbolizes a clearing of the way for the re-use of ORNL's central campus, a container of cleanup waste from the Building 3026 demolition project was trucked to an Oak Ridge Reservation landfill on October 20.

Curtis Boles

On a foggy October morning, a bin of waste was hoisted onto a truck bound for the EMWMF.

The intermodal container was filled with building material from the demolition preparation activities under way at the dilapidated facility in ORNL's central campus. The material included asbestos and a small amount of low-level radioactive contamination.

The old radioisotope laboratory, out of use for more than a decade, contains hot cells and other support system equipment left over from its former mission. The initial stages of the American Recovery and Reinvestment Act-supported demolition are removing the asbestos and other problematic materials before the wooden structure is demolished.

The waste from 3026 made up the first shipment to the Environmental Management Waste Management Facility near Y-12. Another Recovery Act-funded project, currently in the procurement phase, will remove the hot cells after the wooden structure is demolished.

"We've been working for over a year in getting all the approvals and characterization information to be able to start shipping the waste, and this was our first load," says Dirk Van Hoesen, who is leading the ORNL cleanup projects being carried out by UT-Battelle.

"This effort will culminate in the cleanup of the central campus, starting with Building 3026," he says. Once the actual teardown of the old facility begins, the EMWMF will receive up to15 truckloads of material a day."

Opening the EMWMF to material from all over the ORR is an important step in the Integrated Facilities Disposition Project, which is the official moniker of ORNL's effort to clear

(See HAUL, page 2)

Haul

Continued from page 1

away old, outdated facilities in the central campus to make way for potential new development.

The EMWMF, operated by the Oak Ridge environmental management contractor, Bechtel Jacobs Corporation, already receives a steady stream of truckloads from demolition activities at the East Tennessee Technology Park, the old K-25 Site.

Transferring waste around the highly regulated environment of the ORR requires a fairly sophisticated system. A "haul road" was specially constructed to receive shipments from ETTP, complete with bridges over public highways, and technology is speeding the process.

The Building 3026 demolition is a major step in a long campaign to clean up the central ORNL campus.

One obvious time-saver is a scale set up near the substation at Reeves Road across Bethel Valley Road from the Fifth Street entrance to the Lab. The truck mounts the platform and a digital readout instantly displays its weight.

Less conspicuous is the trucks' RFID (radio frequency identification) system, manifested by a small box on the trucks' front fender.

"It's a passive RFID system that we instituted at Bechtel Jacobs and have since transitioned to ORNL and Y-12 that allows us to track trucks on the road for security purposes, as well as electronic shipping information," says Dean Newton of SCI, an EM subcontractor.

"Our main focus is to turn trucks in and out of the EMWMF as fast as possible," Dean says. "And that's critical when you're talking about 210 to 240 trucks a day."

Dean says the system is saving 25 minutes per trip for each truck in cycle time. Aside from the obvious boost in efficiency, the avoidance of chokepoints and bottlenecks made possible by the electronic system benefits the environment because trucks aren't sitting still and idling nearly as often.

"It's been a huge time saver as well as saving impact on the environment," Dean says.

The EMWMF landfill opened in May 2002 to accept low-level radiological and low-level mixed waste. The landfill has four waste cells, with another under construction.

Another demolition project that stands to benefit from the waste hauling arrangement with BJC is the demolition of the Quonset huts at the top of Third Street. The fabled "Winter Palace"—Buildings 2000 and 2001—will undergo a similar ritual of being gutted and readied for razing this year.

The ability to send the waste to a nearby, on-site landfill will pay dividends down the road in brown fields available for new uses and missions. Knowing that some of the trucks entering the EMWMF are from ORNL's IFDP is a major step for the ORNL decontamination and demolition projects.

"This has been big day for the central campus cleanup," Dirk says.—*B.C.*

Lab welcomes three new Wigners

ORNL welcomes three new Wigner fellows. The Eugene P. Wigner fellowships are two-year appointments named in honor of the Nobel laureate and first research director of ORNL.

Pooser

Raphael Pooser received a bachelor's in physics in 2001 from New York University. He continued studying physics, specializing in quantum optics and quantum information as a National Science Foundation SELIM fellow at the University of Virginia in Charlottesville, where in 2007 he received his doctorate in engineering physics from the School of Engineering and Applied Sciences.

Raphael continued to pursue his interest in nonlinear and quantum optics by accepting an Intelligence Community postdoctoral fellowship in the Laser Cooling and Trapping group led by Bill Phillips at the National Institute of Standards and Technology. There he contributed to groundbreaking work by demonstrating a short-term memory for quantum-entangled images and the first clone of an entangled state. He hopes to continue this line of research at ORNL, where he joins the Computational Sciences & Engineering Division as a Wigner fellow this September.

In his spare time, Raphael likes hiking and camping with his wife, Charlotte, and spending time with his three brothers based in Knoxville.

Vlassiouk

Ivan Vlassiouk joined the Measurement Science & Systems Engineering Division in August. He received his master's degree from Novosibirsk State University, Russia, and doctorate from New Mexico State University in Physical Chemistry, with postdoctoral training at the University of California, Irvine. Before joining ORNL, he published more than 20 papers in major journals and received numerous awards including outstanding graduate from NMSU.

His research plans in the Nanostructures and Systems group includes the investigation of various nanoscale phenomena, with emphasis on the emerging field of nanofluidics. Outside of work, Ivan enjoys volleyball, soccer and camping.

Ward

Zac Ward joined the Materials Science & Technology Division's Low-Dimensional Materials Physics group as a Wigner Fellow in June. He received his doctorate in December 2008 in physics from the University of Tennessee. As a student, Zac was recognized for his pioneering work in confined complex materials in the form of graduate student awards from several international societies, including the 2009 Outstanding Dissertation in Magnetism Award given by the American Physical Society.

His work with Jian Shen will focus on unraveling the intricate electronic interplay that drives emergent phenomena in complex materials.

Zac enjoys spending time with friends, sports and tinkering with computers.

Reporter

is published for employees and retirees of Oak Ridge National Laboratory, which is managed by UT-Battelle for the U.S. Department of Energy.

Bill Cabage, editor, 865/574-4399 or cabagewh@ornl.gov

Deborah Barnes, associate editor, 865/576-0470 or barnesds@ornl.gov

On the Web: www.ornl.gov/reporter

DOE Inspector General Hotline: 1-800-541-1625

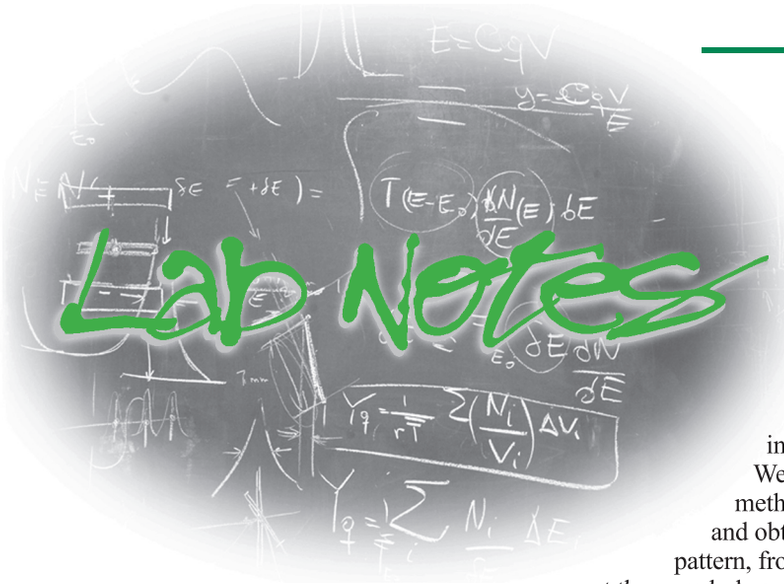

Nobel winner made a stop at ORNL

ORNL added to its list of Nobel laureates with Lab affiliations following the announcement last month that Venkatraman Ramakrishnan was one of three winners of the 2009 Nobel Prize for Chemistry.

Ramakrishnan worked at the Lab in the early 1980s. The Biosciences Division's Ed Uberbacher recalls that "Venki," hired by the late Wally Koehler, came to ORNL to lead a biological neutron scattering program with Ed and the late Gerry Bunick. Ed notes that Venki performed a number of studies before moving to Brookhaven Lab, which had a greater emphasis on structural biology.

He apparently had high hopes at ORNL. Former *ORNL Review* editor Carolyn Krause produced a *Review* article with Ramankrishan, titled, "Neutron Scattering: A Tool to Probe Biological Structures," that they wrote together for the spring 1983 issue.

The Neutron Scattering Sciences Division's George Wignall worked with Ramakrishnan to refine small angle neutron scattering studies of polymer latexes.

"[The latex particles] were all monodisperse (i. e. they had the same diameter) and had very sharply varying scattering patterns, which were 'smoothed out' or 'smeared' by the SANS instrumental resolution. We collaborated to develop methods to 'desmear' the data and obtain the true scattering pattern, from which we could work out the morphology (structure), and get insight into the way such particles are made," George writes.

The Wignall-Ramakrishnan team published several articles on their work. George notes that more than a fourth of polymers sold today are in the form of latexes.

Both the HFIR and the Spallation Neutron Source now have cold sources that would have greatly benefited the biological neutron studies that Ramakrishnan aspired to during his time at ORNL.

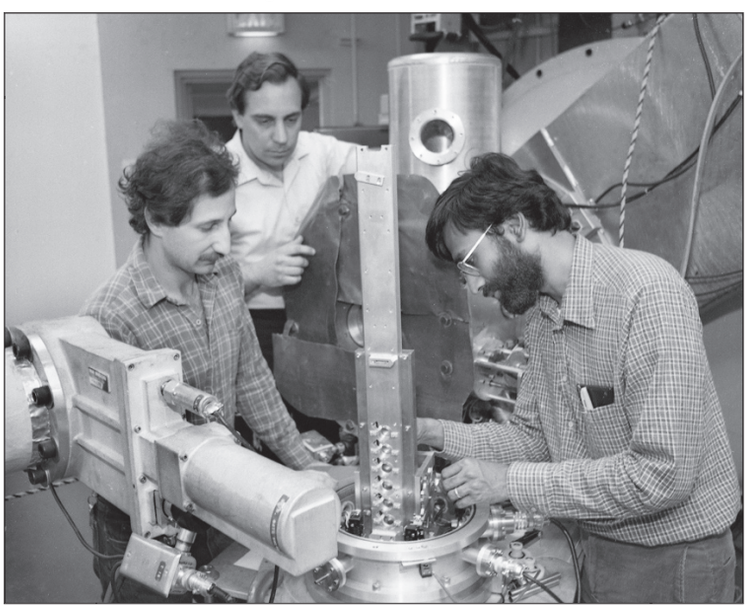

(From left) Ed Uberbacher, Gerry Bunick and Venkatraman Ramakrishnan prepare a neutron scattering experiment in 1983.

Jülich: Great spin on collaboration

Two of the biggest players in neutron scattering science, ORNL and the Jülich Center for Neutron Science in Germany, marked a memorandum of understanding's bearing of fruit on November 4, as officials from the two institutions inaugurated the Neutron Spin Echo Spectrometer.

Jülich, the leader in the field of neutron spin echo spectrometry, has established its state-of-the-art instrument on the Spallation Neutron Source's beamline 15, where it is currently in commissioning.

Beatrix Vierkorn-Rudolph, representing the German government at the ceremony that also kicked off a neutron spin echo spectrometry workshop, noted that the Julich-ORNL collaboration will mark a step forward in understanding the molecular dynamics behind properties of soft materials, including proteins.

"Progress in understanding the motions in proteins and their relevance to function can help us to solve a host of today's problems," said the deputy director-general of large research infrastructures for Germany's Federal Ministry of Education and Research.

Facing the shutdown of its last research reactor at the end of the decade, Jülich's collaboration with DOE's top neutron source will enable the European neutron center to move forward with its studies of slow-process polymers.

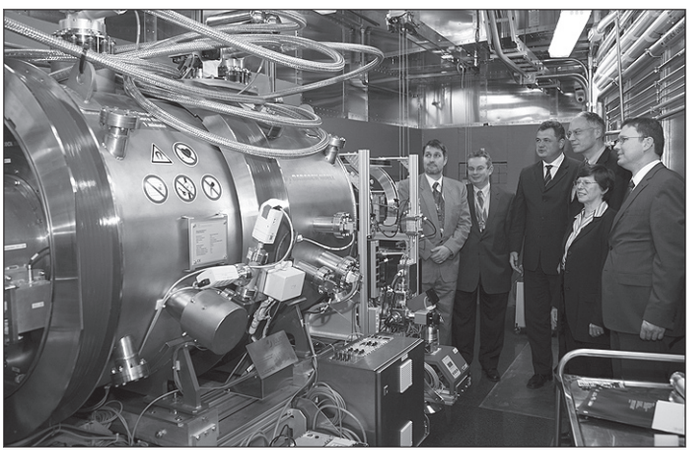

Curtis Boles

In the SNS target building, Michael Ohl (left) shows visitors from Jülich and Germany's Federal Ministry of Education and Research the results of their ORNL collaboration: the Neutron Spin Echo Spectrometer.

NSE principal investigator Michael Ohl noted in a panel discussion that the challenges in working a project between two nations, with different fiscal year schedules not the least of them, resulted in a team spirit that benefited the project.

"I've looked in a lot of people's eyes, and have seen friendships grow—between scientists, engineers and technicians—that have made this project a success," he said.

Neutron Sciences Director Ian Anderson noted that the collaboration is a good match, combining the SNS's beam intensity with Julich's long record of expertise in neutron spin echo spectrometry. The research community stands to be the big winner in the collaboration.

So much so that even Jeremy Smith, a University of Tennessee-ORNL Governor's Chair researcher, is apprehensive about the demand for time on beamline 15.

"I might not get to use the NSE at all. NSE experiments take a long time, and there are so many good proposals," he said during the panel session. "At least I can dream about it."

Reported by Bill Cabage

Awards night: Cole, HTS team win top science awards

ORNL's Awards Night for 2009 was held on November 6. Congratulations to this year's outstanding individuals and teams in operations and research and support.

Laboratory Operations

Secretarial Support

Ann R. Strange, Materials S&T Division. For expert contributions to the preparation of a successful $19 million Basic Energy Sciences proposal, for organizing five international meetings, and for exemplary support of the nation's largest BES-supported materials theory program.

Administrative Support, Nonexempt

J. Kaye Carter, Neutron Scattering Science Division. In recognition of her exemplary service to visiting scientists from around the world who come to ORNL to conduct research at the High Flux Isotope Reactor and Spallation Neutron Source facilities.

Administrative Support, Exempt

Brenda W. Campbell, Physical Sciences Directorate. For exceptional support of scientific staff in the preparation of Basic Energy Sciences and Nuclear Physics program proposals in FY09, particularly for her key role in two winning ORNL Energy Frontier Research Centers.

Excellence in Safety Leadership

Joanna McFarlane, Nuclear Science and Technology Division. For exceptional leadership in promoting a positive safety culture in our research laboratories through her roles on safety committees, as principal investigator, laboratory space manager, hazardous materials inventory custodian, and student mentor.

Integrated Safeguards & Security Management

Deborah L. Gray, Eddie Bishop, Krystee E. Conaway, Robbie L. Gamble, David Robert Hamrin, Penny L. Hosford and Karen Ann Moore. For providing outstanding ISSM support and service to ORNL by ensuring that both science and security requirements are integrated into the non-citizen access review process.

Administrative & Operations Leadership, Group Level

Debbie U. Mann, Business Management Division. For providing exceptional business management support and having a direct impact on maintaining or growing the Laboratory's business in several key areas, including neutron sciences, HFIR, californium-252 production, the Intregrated Facilities Disposition Plan and the Recovery Act.

Administrative & Operations Leadership, Director Level

Lynn R. Eberhardt, Integrated Operations Support Division. In recognition of his numerous and sustained contributions to facilities and operations within ORNL and across other DOE Office of Science labs.

Bargaining Unit Support

Hugh Thomas Christie, Jackson E. Kitchens, Brad A. Lively, Mike B. Loudermilk, Robert P. McDaniel, Randy B. Parrish, Kevin D. Phillips, Gerald L. Powers, John A. Rockwell, Jerry Dean Rodgers, Gary S. Shepherd and Barry G. Whitson. For outstanding contributions and commitment to the HFIR mission of providing safe, reliable, and efficient reactor operation to support world-class neutron science.

Operations Support

Stephen Dirk Van Hoesen, Kathy Carney, Thomas B. Conley, Robert T. Jubin, Paula G. Kirk, Lee B. McGetrick, Lance J. Mezga, Bradley D. Patton, Sharon M. Robinson, Michael W. Stafford and Martin W. Tull. For contributions that have paved the way for real changes in the landscape of ORNL's central campus, making possible the allocation of $170 million of American Recovery and Reinvestment Act funding to clean up the central campus over the next two and a half years.

Community Service

Exceptional Community Outreach by an Individual

Roy E. Wallen, Campus Support & Instrumentation Division. For selfless volunteerism for the betterment of Roane County, for leadership in his local church and community, and for a lifetime of dedication to serving others in the United States and in other countries

Exceptional Community Outreach by a Team

I. Glen Harrison, Helmut E. Knee, Deborah K. Milsap, Judy G. Parker and Rowena Gibson Seals. In recognition of their volunteer work with the Lost Sheep Ministry to help the hungry, homeless and suffering to a better life.

Esprit de Corps

George A. Fisher, Deborah W. Barker, Angela F. Beach, Ella Hawkins DuBose, Teresa D. Ferguson, Vanessa Grebert, Bonnie Hébert, Martha Justice, Harold Frederick Strohl and Joseph L. Weaver. For providing and encouraging outstanding esprit de corps and community outreach within ORNL as part of the Veterans Day Committee to honor the service of ORNL veterans and all those who have served their country.

Community Leadership

Wanda R. McCrosky, Business Management Division. For long-term Oak Ridge community leadership, for her contributions as the first woman to serve as chair of the ORNL Federal Credit Union's board of directors, and for her leadership as vice chair of the Anderson County Board of Education.

Science Communicator

Bernadette L. Kirk, Nuclear S&T Division. For consistent and energetic leadership in outreach to students and universities that exemplifies the spirit needed to identify and recruit the very best staff for ORNL R&D missions.

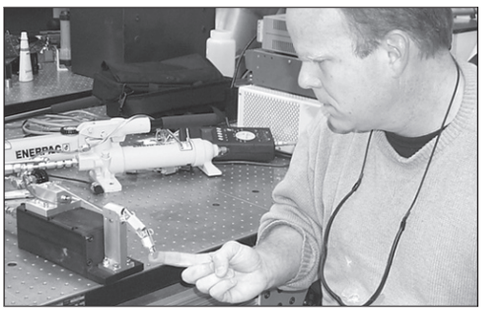

Lonnie Love's work with biomedical robots and fluidics were among his achievements honored with the Inventor of the Year award.

Science and Technology

Technical Support

John M. Wheeler, Connie L. Begovich, David L. Bond, Lara A. James, Miriam E. Kelmers, Tina L. Overby, Steve Parham, Janie M. Phillips, Rick Phillips and Michael S. Pung. For transformation of ORNL's IT application environment in record time.

Early Career Award for Engineering Accomplishment

Claus Daniel, Materials S&T Division. For catalyzing, through technical insights, strategic vision and team building, research at ORNL in energy storage and for laying the groundwork for substantial funding increases by articulating specialized and unique battery research and development.

Early Career Award for Scientific Accomplishment

De-en Jiang, Chemical Sciences Division. For advances in the application of computational methods to complex fundamental problems in separation, catalysis, and interfacial science.

R&D Leadership, Group Level

David R. Cole, Chemical Sciences Division. For his leadership, creativity, and exceptional management and motivational skills in growing the Geosciences program at ORNL.

R&D Leadership, Director Level
Douglas B. Kothe, National Center for Computational Sciences. For outstanding and exemplary leadership of the scientific mission of the National Center for Computational Sciences.

Excellence in Technology Transfer
Van D. Baxter, C. Keith Rice, Richard W. Murphy, Randall L. Linkous and William G. Craddick, Energy & Transportation Science Division. For facilitating, through a collaborative research and development agreement with General Electric, a cost-effective, commercially practical electric water heater that uses 50 percent less energy, that reached the marketplace.

Inventor of the Year
Lonnie J. Love, Measurement Science & Systems Engineering Division. For inventions and innovation in the fields of bio-generation of energy-related materials, omnidirectional vehicles, fluidics controls, and biomedical robotics, enabling significant impact on human health and welfare and on future clean, efficient energy.

Engineering Research & Development
Mallikarjun Shankar, Budhendra L. Bhaduri, Nakul R. Datar, Steve J. Fernandez, Marc T. Filigenzi, Thomas J. King, Ronald W. Lee, Olufemi A. Omitaomu, Alexandre Sorokine and John P. Stovall. For developing, testing and delivering VERDE, a unique wide-area situational tool that is being used in DOE's Energy Restoration Center to prepare for and respond to major energy and electric infrastructure disruptions.

Scientific Research
David G. Mandrus, Andrew D. Christianson, Olivier A. Delaire, Mao-Hua Du, Mark D. Lumsden, Michael A. McGuire, Stephen E. Nagler, Brian C. Sales, Athena Safa-Sefat and David J. Singh. For moving quickly, comprehensively and expertly to study the properties of a new family of high-temperature superconductors (layered FeAs) and, in so doing, establishing a clear world leadership position for ORNL.

Distinguished Engineer
Gerard M. Ludtka, Materials S&T Division. For visionary and pioneering work demonstrating thermomagnetic processing as a new and enabling synthesis, catalysis and processing approach to customize microstructure and properties at the atomistic-through-macroscopic scales.

Distinguished Scientist
Michael L. Simpson, Center for Nanophase Materials Sciences Division. For scientific leadership in the founding and evolution of the new field of noise biology.

Director's Awards

Each year, three individuals and a team receive Director's Awards as the outstanding awards night honoree in science and technology, Laboratory operations and community service. This year, Lab Director Thom Mason cited the following individuals and team.


David R. Cole

David R. Cole the Chemical Sciences Division received the Director's Award for outstanding individual accomplishment award in Science & Technology for his leadership, creativity and exceptional management and motivational skills in growing the Geosciences program at ORNL.


Brenda W. Campbell

Brenda W. Campbell of the Physical Sciences Directorate received the Director's Award for Laboratory Operations for her exceptional support of scientific staff in the preparation of Basic Energy Sciences and Nuclear Physics program proposals in FY 2008, particularly for her key role in two winning ORNL Energy Frontier Research Centers.


Wanda R. McCroskey

Wanda R. McCrosky of the Business Management Division received the Director's Award for Community Service for her long-term Oak Ridge community leadership, for her contributions as the first woman to serve as chair of the ORNL Federal Credit Union's Board of Directors and for her leadership as vice chair of the Anderson County Board of Education.

The Director's Award for Outstanding Team Accomplishment this year stems from the Scientific Research category for work that followed the discovery of a new high-temperature superconducting material. The team of David G. Mandrus, Andrew D. Christianson, Olivier A. Delaire, Mao-Hua Du, Mark D. Lumsden, Michael A. McGuire, Stephen E. Nagler, Brian C. Sales, Athena Safa-Sefat and David J. Singh are noted for moving quickly, comprehensively and expertly to study the properties of a new family of high-temperature superconductors (layered FeAs) and, in so doing, establishing a clear world leadership position for ORNL. The members of the group are housed under the Materials S&T and Neutron Scattering Science divisions.


The high-temperature superconductor team (left to right, front row) Athena Safa-Sefat, Mao-Hua Du, Mark D. Lumsden, David J. Singh and Olivier A. Delaire, (back row) Michael A. McGuire, Stephen E. Nagler, Brian C. Sales, David G. Mandrus and Andrew D. Christianson.

Target

Continued from page 1

target will also be a strictly cold-source facility, in which the neutrons are cryogenically chilled to reduce their thermal energy.

The SNS currently has a cold source; however, the second target hall's instruments will be designed to take advantage of those higher densities of cold neutrons for certain types of research, such as soft materials analysis, while the original target will continue to specialize in experiments such as time-of-flight measurements.

The revolving target's disc will not be overly large or fast-spinning: 1.2 meters in diameter and revolving at a rate of 30 rpm (similar to a long-play record) up to 60 rpm. The rotating-target team's conceptual design offers a number of advantages over both a stationary solid target and the mercury target.

"We may see a factor of 25 reduction in peak heating and damage to the target, and that's a big deal," Tom says.

Target life is a huge advantage. The rotating target could last from five years to 10 years, depending on power levels. The conceptual design was based on three megawatts of peak power.

In contrast, the mercury target will eventually require changeouts two or three times a year, although the original target bested most predictions of service life, lasting more than three years as the SNS is being ramped up to full power.

Joining Tom McManamy on the candidate design team are Mark Rennich, Franz Gallmeier and Jim Janney, who are pursuing the details involved in fitting an untried design approach into the next-generation neutron source target.

The idea isn't completely new. Designers at the neutron science institute in Jülich, Germany, proposed a rotating target back in 1981. European interest in the approach persists. A collaborating team at Bilbao, Spain, which was a candidate site for the proposed European Spallation Source, is contributing a stainless steel drive shaft and target to complement the prototype drive unit now located in the high-bay facility in the former Experimental Gas-Cool Reactor facility, which is where the SNS's mercury target design was first prototyped and tested.

A Laboratory-directed R&D project has explored issues with target materials and designs.

"We are studying how tungsten behaves during irradiation, and how to integrate the various components into the overall target design," Tom says. "There are still a lot of unknowns about how tungsten behaves under irradiation, including its ductility and thermal conductivity."

'We may see a factor of 25 reduction in peak heating and damage to the target, and that's a big deal.'

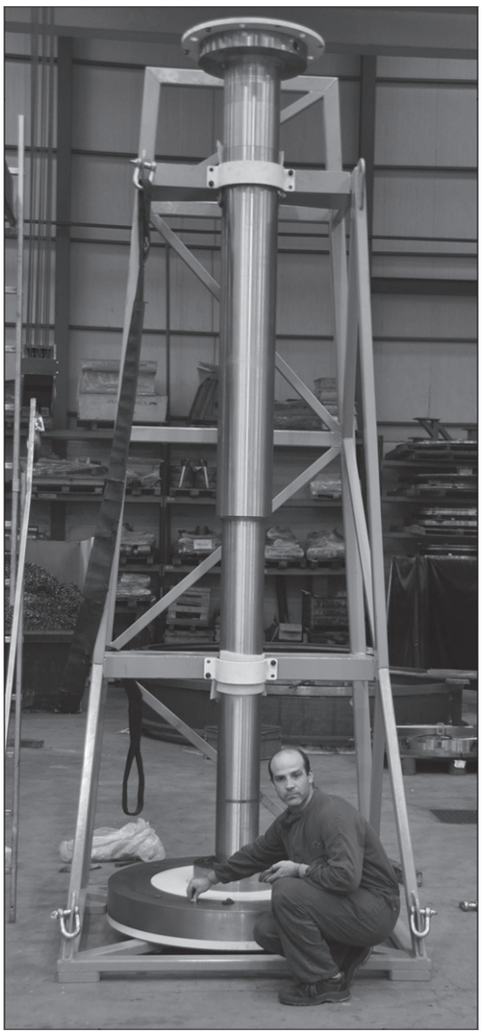

The target team plans to mount this recently delivered mockup shaft and 1.2-meter-diameter dummy target onto the drive unit tested in a Laboratory-directed R&D project.

Decay heat, or the heat produced by radioactive decay of spallation products, is a significant issue, particularly in a loss-of-coolant situation. Here again, the rotating design would present another advantage compared with a stationary solid target in reducing the peak decay heat in the target. That's because the heat is distributed throughout the target's disk. Decay heat, and the performance-inhibiting cooling water requirements in a solid target, were factors in the SNS's adoption of the mercury target design.

Another major advantage of the rotating target over the mercury target is accessibility to the cooling system. Because the mercury is so highly activated during spallation, all maintenance in the target service bay must be done by remote handling for the life of the target facility. On the other hand, because the rotating target is cooled with a closed water system, the water cooling system components will "cool" enough after a few days to be accessed manually.

The SNS team's design for the target is modular, meaning drive motors, pumps and other components can be worked on individually without having to disassemble the entire target.

Another overall advantage of the second target station is its ability to operate during maintenance outages of the accumulator ring, since its protons will not be sent through the ring. That will be a major plus for second-target users, who won't be forced to interrupt experiments during ring maintenance.

In the next several months, the SNS team will be weighing the advantages of the liquid mercury and rotating hard target designs before choosing the winning approach. In the meantime, proposed neutron facilities, including ESS in Europe and in China, will be studying the design as well.

Tom's current position on the cutting edge of neutron source design has its beginnings in fusion. He came to ORNL's fusion group in 1979 working with magnet designs, including superconducting magnets for the large-coil project. He moved to the Advanced Neutron Source reactor project and then to the SNS after the ANS was canceled in the mid-1990s. Tom was the lead engineer on Tony Gabriel's ultimately successful mercury target system team.

Following some workshops in the coming months to address operational and safety topics with the candidate target designs, a decision on the second target station's configuration could be made by summer 2010.—*B.C.*

Hauck holds Householder fellowship

ORNL's current Householder fellow came to the Lab by way of the universities of South Carolina and Maryland.


Hauck

The Alston S. Householder Postdoctoral Fellowship in Scientific Computing honors the founding director of ORNL's Mathematics Division (now Computer Science & Mathematics Division) and recognizes Householder's seminal research contributions to the fields of numerical analysis and scientific computing.

Cory Hauck is working with Ed D'Avezedo in the Computational Mathematics group of the Computer Science & Mathematics Division. Cory received his bachelor's degree in physics and mathematics from the University of South Carolina in 1997 and, shortly after graduating, took an engineering position at Doty Scientific, Inc. in Columbia, S.C.

In 1999, he attended graduate school at the University of Maryland, receiving a master's degree in electrical and computer engineering in 2004 and a doctorate in applied mathematics in 2006.

Before coming to Oak Ridge, he was a postdoctoral research associate with the Center for Nonlinear Studies in the Computational Physics & Methods group at Los Alamos. Cory's research to date has focused on computational aspects of kinetic theory and hyperbolic PDE.

The Householder fellowships are one-year appointments, renewable for a second year.

Shull fellow Ke has drive for knowledge

Xiangle Ke got his first taste of physics in high school. From there, his insatiable appetite for knowledge led to undergraduate studies at Beijing Normal University in physics, then to the masters program. He crossed the Pacific Ocean to the United States for his doctorate degree.


Ke

"Physics[is] closely related to daily life. And a lot of things are unexplored, a lot of phenomena unexplored," Ke says. "It's a fantastic area. It's extraordinary."

The 32 year-old Ke got his Ph.D. from the University of Wisconsin-Madison two years ago. As a postdoc at Pennsylvania State University, he studied geometrically frustrated magnets, artificial geometrically frustrated nanostructures and strain-enabled multiferroic materials and engineered magnetic oxide superlattices.

But once again, he wanted to dig deeper and to know more. He wanted to try another technique he had read about but never used—neutron scattering. "I really feel that neutron scattering is a fantastic way to uncover physics," Ke says. He then applied for the Shull Fellowship. Ke believes that with the plethora of resources, he will be able to learn neutron scattering from the fundamentals.

"[There is] lots of physics associated with neutron scattering I need to learn," he says. "I want to explore these techniques…to study these fantastic physics systems."

As such, this may present another course in feeding Ke's appetite for knowledge.

— *Serena Dai*

Service Anniversaries

November 2009

40 years: Ben C. Larson, Materials Science & Technology

35 years: Fauna C. Stooksbury, Materials Science & Technology; Larry Eugene Seiber, Energy & Transportation Science; Ronald E. Battle, NScD Research Accelerator; Charles E. Bruce, Utilities

30 years: Joseph F. Birdwell, Jr., Nuclear Science & Technology; Larry E. Johnson, Logistical Services; Pat Daniel Howard, Nonreactor Nuclear Facilities; John B. Brock, Fabrication, Hoisting & Rigging; Joseph L. Weaver, Safety Services; Michael G. Littleton, NScD Research Accelerator; Sherry B. Townsend, Global Nuclear Security Technology; William A. Miller, Energy & Transportation Science; Lance Neil McCold, Environmental Sciences; Danny Walls, Information Technology Services; Bill Wright, Quality Systems and Services

25 years: Patricia A. Buntrock, Global Nuclear Security Technology; Shih-Miao Chin, Energy & Transportation Science; John D. Budai, Materials Science & Technology; Charles Wayne Glover, Computer Science & Mathematics

20 years: James Henry Miller, Materials Science & Technology; Saed Mirzadeh, Nuclear Science & Technology; Janice B. Anderson, Operations & Business Management; Donald L. Garrett, Facilities Development; Barbara G. Beckerman, Computational Sciences & Engineering; Charlotte Ann Townsend, Laboratory Protection; Samuel Arthur Lewis Sr., Energy & Transportation Science

New Staff Members

October 2009

Omar Abdelaziz Ahmed Abdelaziz and Isabelle B. Snyder, Energy & Transportation Science

Stanley Myles Baker, NScD Research Accelerator

Christopher Grover Baker and Jun Jia, Computer Science and Mathematics Tyler Grant Cornell, Global Initiatives Dir (transfer) Stacy Leanne Hall, Health Services (re-hire)

Stacy Lynn Hubbard, Karen Louise Long, Sarah E. Morris, Candice Lea Terry, Teresa Gail Moore (re-hire), Deborah Lynn Rose and Angela R. Boswell (re-hire), Human Resources Dir.

Timothy Franklin Humphrey, Information Technology Services

Linda Mrochek Jones, Contracts

Catherine Elizabeth Romano and Jay Steven Kehn, Nuclear Science & Technology

Matthew Alan Weaver and Shannon Duane Fritts, Facilities Management Paula Pittard King Booker, Campus Support & Instrumentation (re-hire)

Cathy Higdon Brown, Environmental Management Program Office

Douglas James Fuller and Ashley Dawn Barker, Center for Computational Sciences

Michael Ray Kendrick, Nonreactor Nuclear Facilities

Matthew Thomas Sieger and Paula Bishop Richards, Quality Systems & Services

Gary Leland Sills and Bradley Lee Sexton, Fabrication, Hoisting & Rigging

Barry Lane Winn, NScD Neutron Scattering Science

John Charles Doesburg, National Security Dir. (re-instatement)

Brent Kevin Kincaid, Safety Services

Esther Sullivan Parish, Environmental Sciences

Jerry Matthew Parks, Biosciences

Daniel Aaron Schaeffer, Measurement Science & Systems Engr.

INSIDE . . .

No. 116 **November 2009**

Solid target idea, page 1 **Cleanup milestone,** page 1
Wigner fellows, page 2 **Lab Notes:** Nobel winners Lab days, Neutron Spin
Echo, page 3 **Awards Night,** page 4, **Shull, Householder fellows,** page 6

OAK RIDGE NATIONAL LABORATORY
Reporter
P.O. Box 2008
Oak Ridge, TN 37831-6266

PRSRT STD
U.S. Postage
PAID
Permit # 37
Powell, TN

Staff members take a swing at 'Beep Baseball' in disability field day

Photos: Jason Richards and Cindy Kendrick

Photos, from left: Ann Bryant steps up to the plate while pitcher Jimmy Stone contemplates the possibility of a Beepball spitter. Jerry Cunningham tackles the buzzing base in a timed runoff to win the first day's title for the Environmental Protection & Lab Waste Services Meatheads team. Local TV personality Bill Landry takes a swing.

Beep Baseball" was the main event at November 3's DisABILITY Resource Center Walk, Rock and Roll Field Day, co-sponsored by the Community Shares campaign and the Diversity and International Office.

The object of the game is to hit a beeping ball blindfolded and find the base before a blindfolded fielder finds the ball.

Beepball and other activities gave staff members an opportunity to experience how a person with disabilities navigates through the world.

Club ORNL

Get the details and latest news on Club ORNL Events online via the ORNL home page and on *ORNL Today.* This information can also be viewed outside of ORNL via the external Club ORNL SharePoint Site: https://info.ornl.gov/sites/clubornl. From this site, you can view upcoming Club ORNL Events, and ORNL retirees can request an XCAMS account. Having an XCAMS account will allow ORNL retirees to participate in these events. Lara James is the retiree point of contact, 576-3753 or jamesla@ornl.