Real time wall conditioning with boron and boron nitride injection in ASDEX-Upgrade

PPPL: A. Bortolon, R. Lunsford, R. Maingi, A. Nagy
IPP: V. Rohde, E. Wolfrum, R. Neu, A. Herrmann, A. Kallenbach, R. McDermott, W. Suttrop

VLT video conference presentation
16 Jan 2018

Max-Planck-Institut für Plasmaphysik

ASDEX Upgrade

PRINCETON PLASMA PHYSICS LABORATORY

New impurity powder dropper is being deployed on a number of fusion devices

- **Deployed at AUG 10/2017**
  - Goal: increase operational space (e.g. lower ν^*) with high-Z coated limiters
  - Injected BN, B powder into H-modes
- New units built for EAST & DIII-D
  - Goal to compare Li, B, BN, C…
- Plan to deploy at W7-X (2020)
- Possible deployment KSTAR (9/18)
- Discussing with JT60-SA

- Evaluate for ITER if long pulse experiments successful (migration, dust, need for higher velocity…)

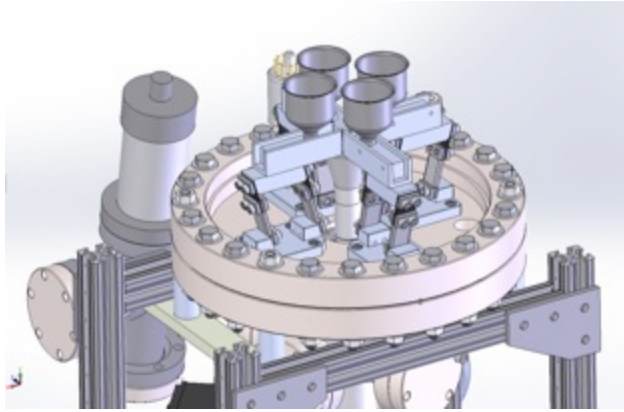

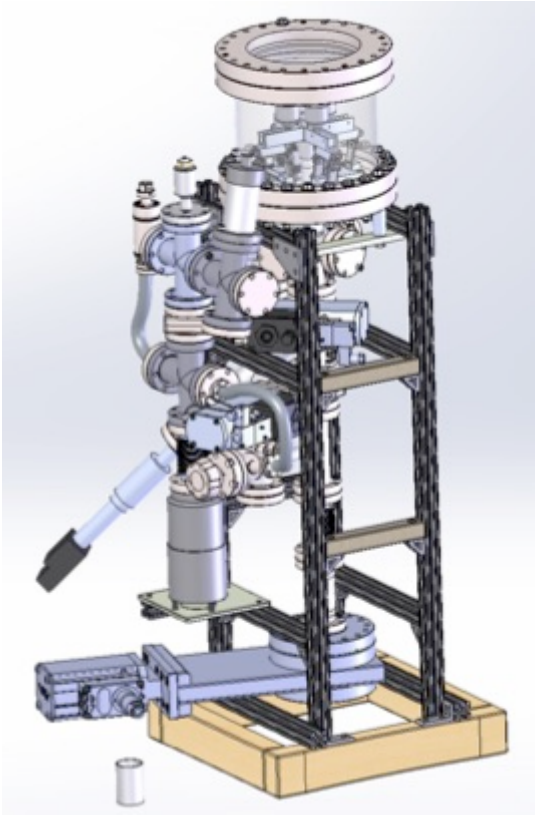

Innovative gravitational dropper used to drop lithium and improve performance in the edge of fusion devices

NSTX: ELM suppression

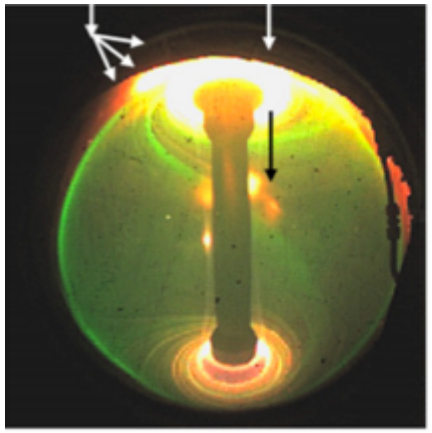

ELMs and MARFES vanish at t ~ 500 ms. Stored energy peaks and a sharp plasma edge with Li^{+1} radiative mantle develops.

D. Mansfield, FEDC **85** (2010) 890

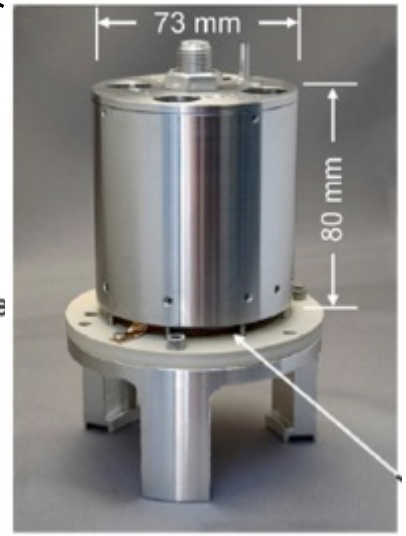

D3D: high confinement bifurcations

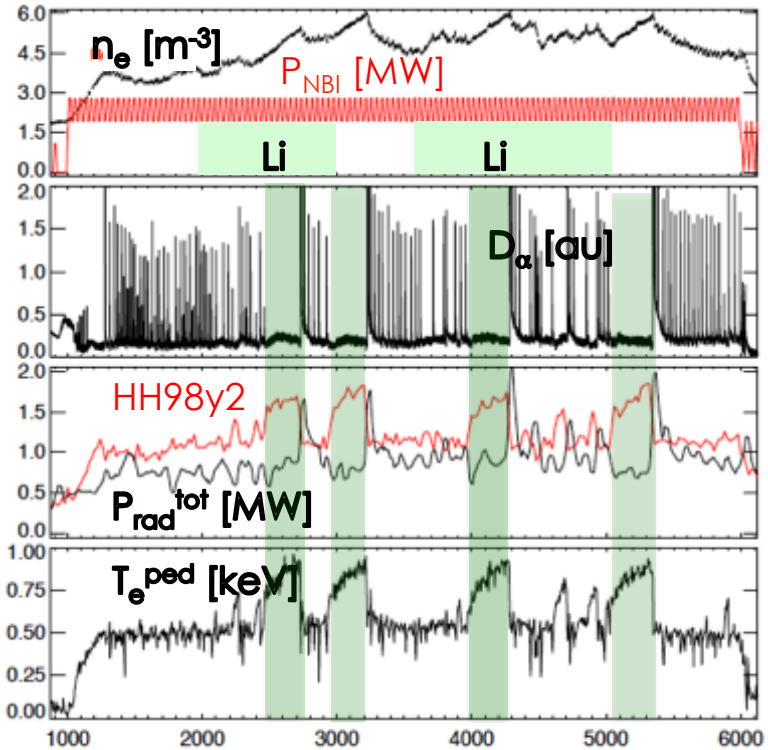

T. Osborne, Nucl. Fusion **55** (2015) 063018
R. Maingi, H-mode Workshop, Oct. 2015

H98y2 ≤ 1.8

EAST: ELM suppression

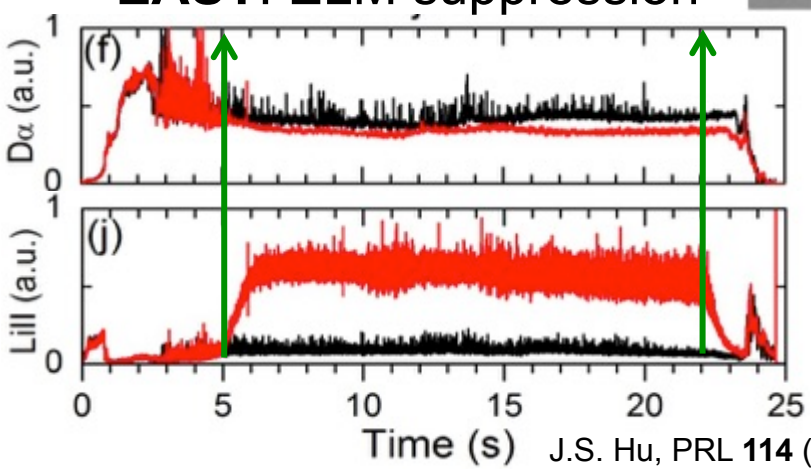

H98y2 ~ 0.75

J.S. Hu, PRL **114** (2015) 055001

Outlook: new design for powder dropper allows injection of other, non-metallic low-Z impurities

- New linear feed powder dropper system designed and tested
  - By A. Nagy & A. Bortolon

Material	Original	New design
Boron (B)	No	Yes
Boron Nitride (BN)	No	Yes
Boron Nitride (BN)(Dennis)	No	Yes
Boron Carbide (B4C)	No	Yes
Silicon Carbide (SiC)	No	Yes
Graphite (C)	No	Yes
Lithium (Li)	Yes	Probably
Tin (Sn)	Yes	Yes

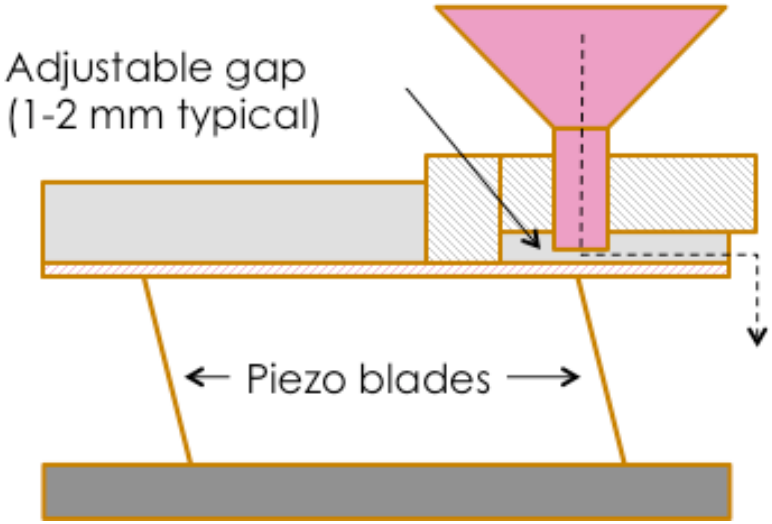

A. Nagy, IEEE Trans. Plasma Sci. (2017) submitted

Examples of tests with powders other than Li

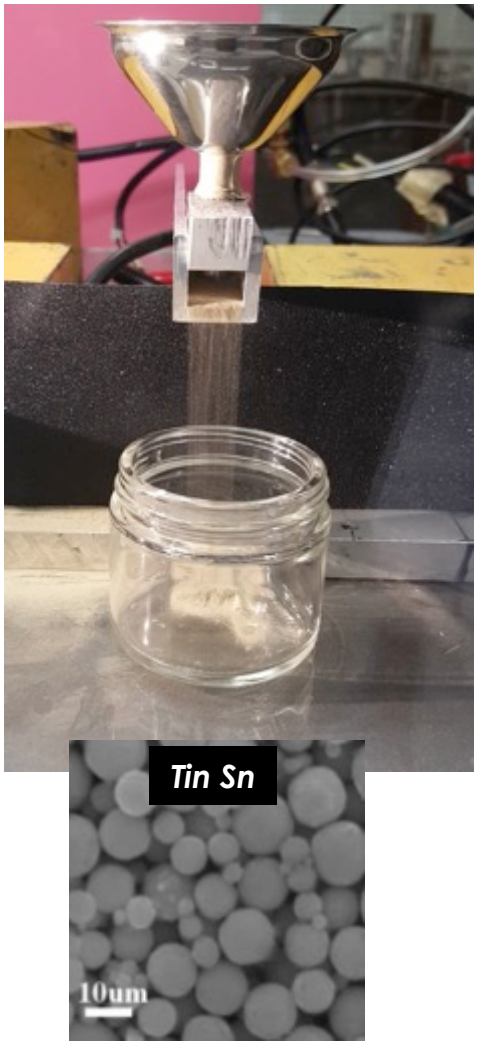

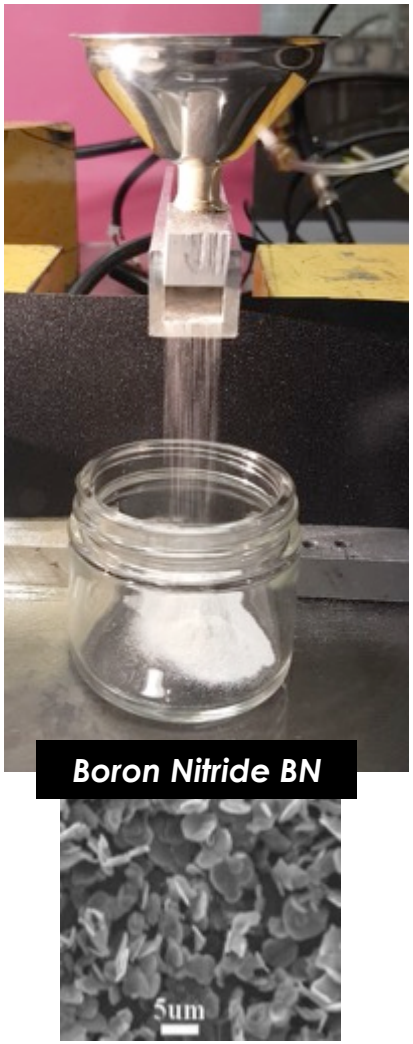

Dropper flow rate is calibratable and reproducible

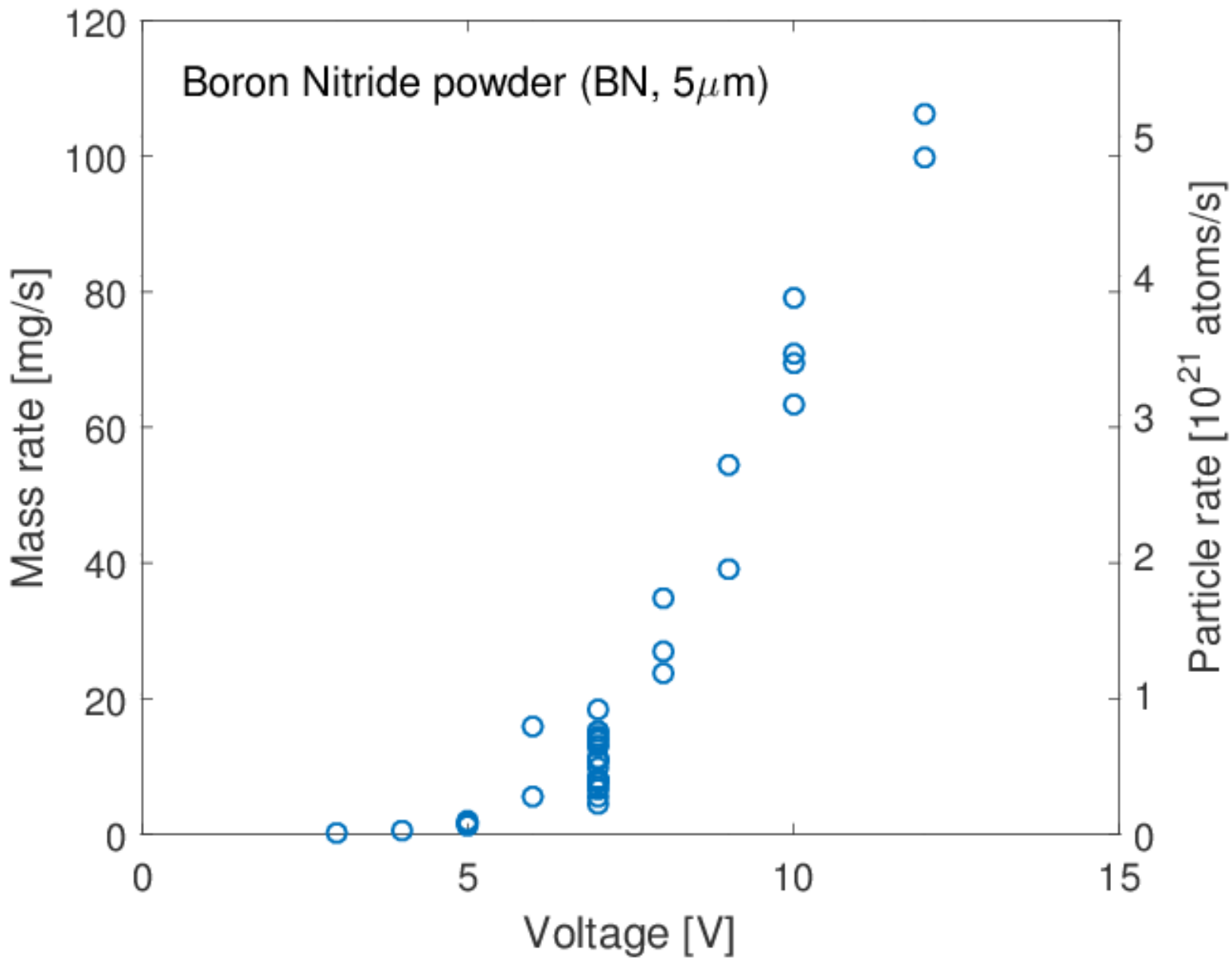

Dropper flow rate is calibratable and reproducible

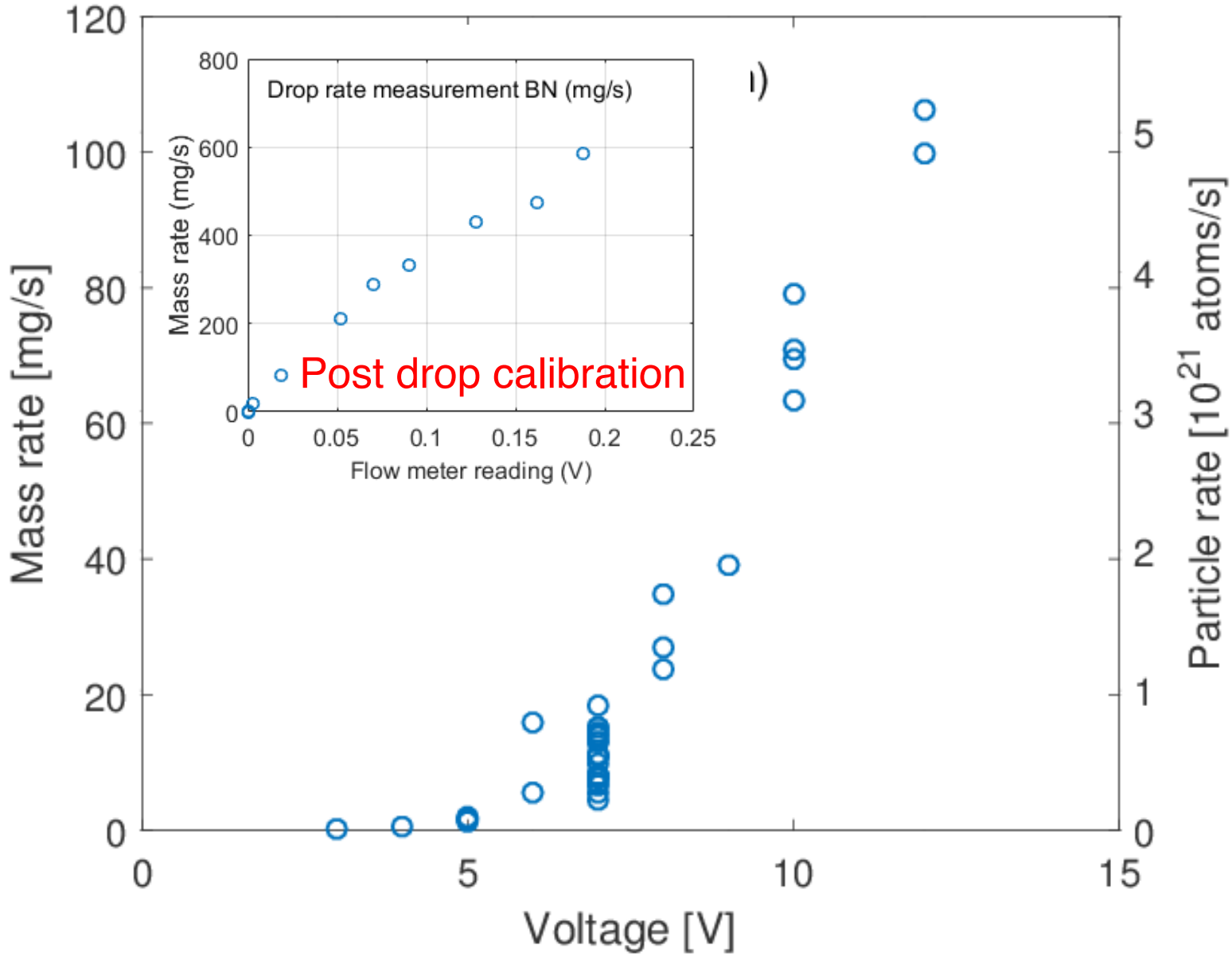

Features of four chamber impurity powder dropper

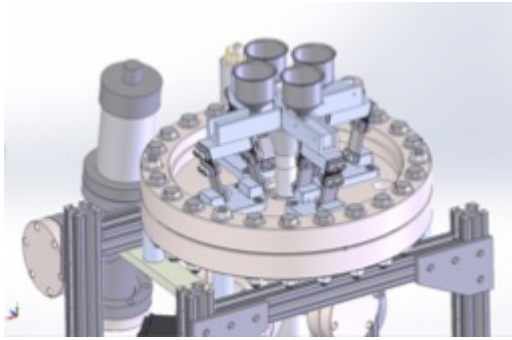

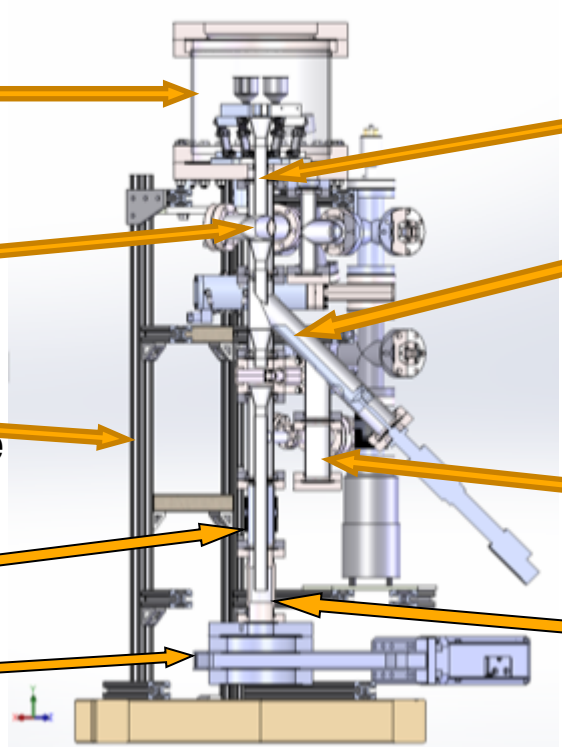

Cross-section of assembly

PPPL & IPP collaboration developed to enable PFC reconditioning using plasma discharges

- **Goal**: enable real-time wall conditioning on AUG: a high power, metal wall machine
  - Future applications for JET and ITER

- **Method**: deploy newly developed four reservoir impurity powder injector on ASDEX-Upgrade
  - AUG presently uses diborane, which has explosion and toxicity risks
  - Initial interest in AUG: BN and B powder injection

- **Status**: deployed & used in first expt (9/25-10/14/17)
  - Technical test: demonstrated ability to inject impurities during discharges
  - Physics: evaluate prospect for rapid wall re-conditioning

Dropper developed by PPPL team at D3D, including college interns

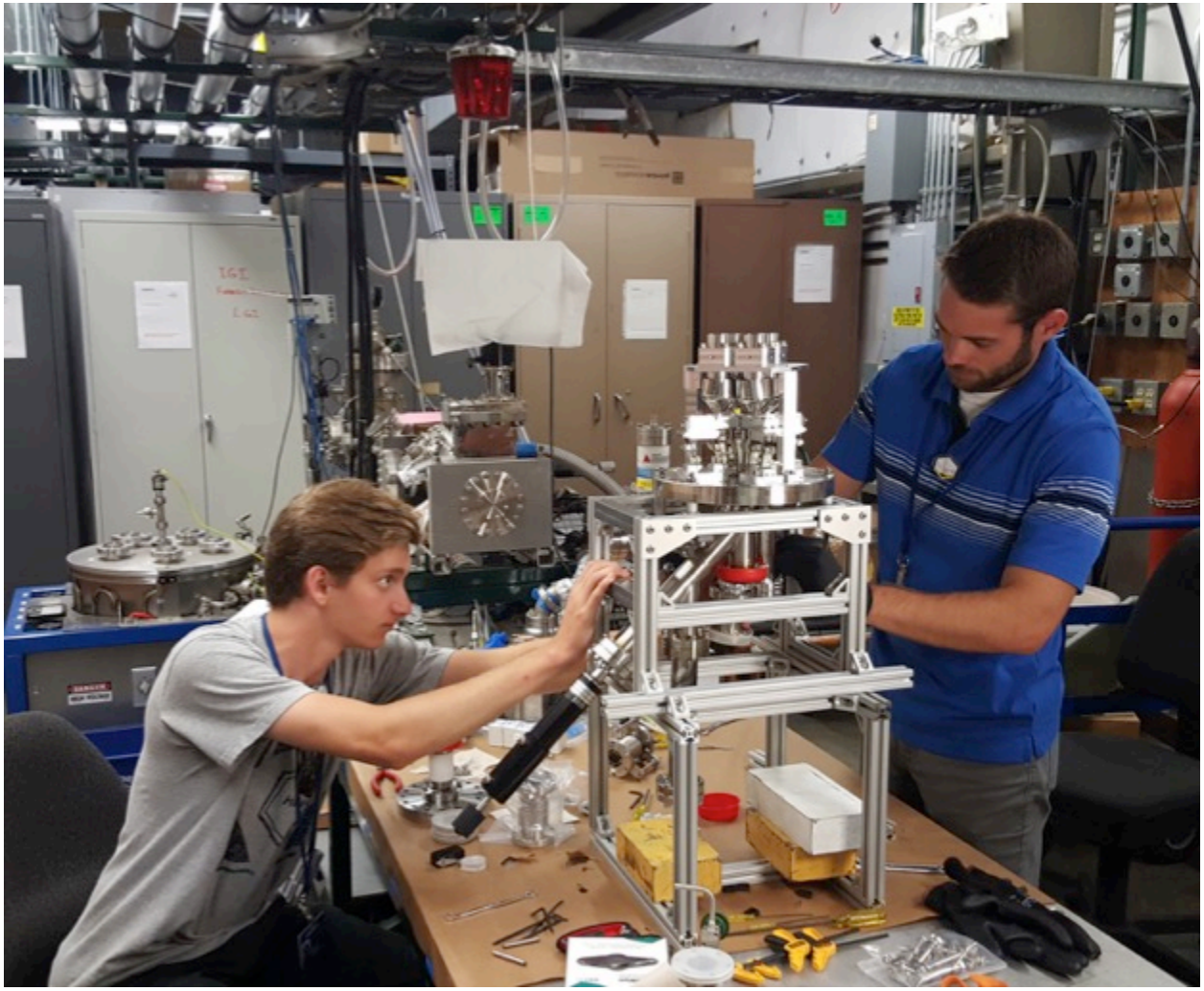

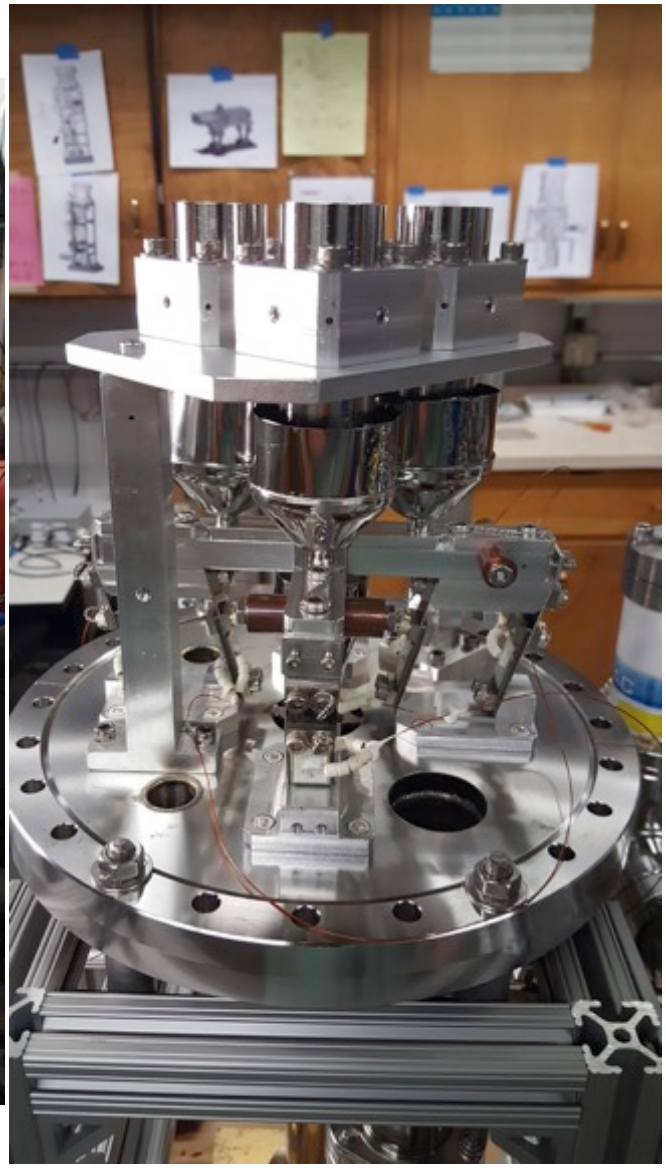

Dropper with B & BN used for AUG experiments in 10/17 (Alex Nagy and Ale Bortolon installed it end of 9/17)

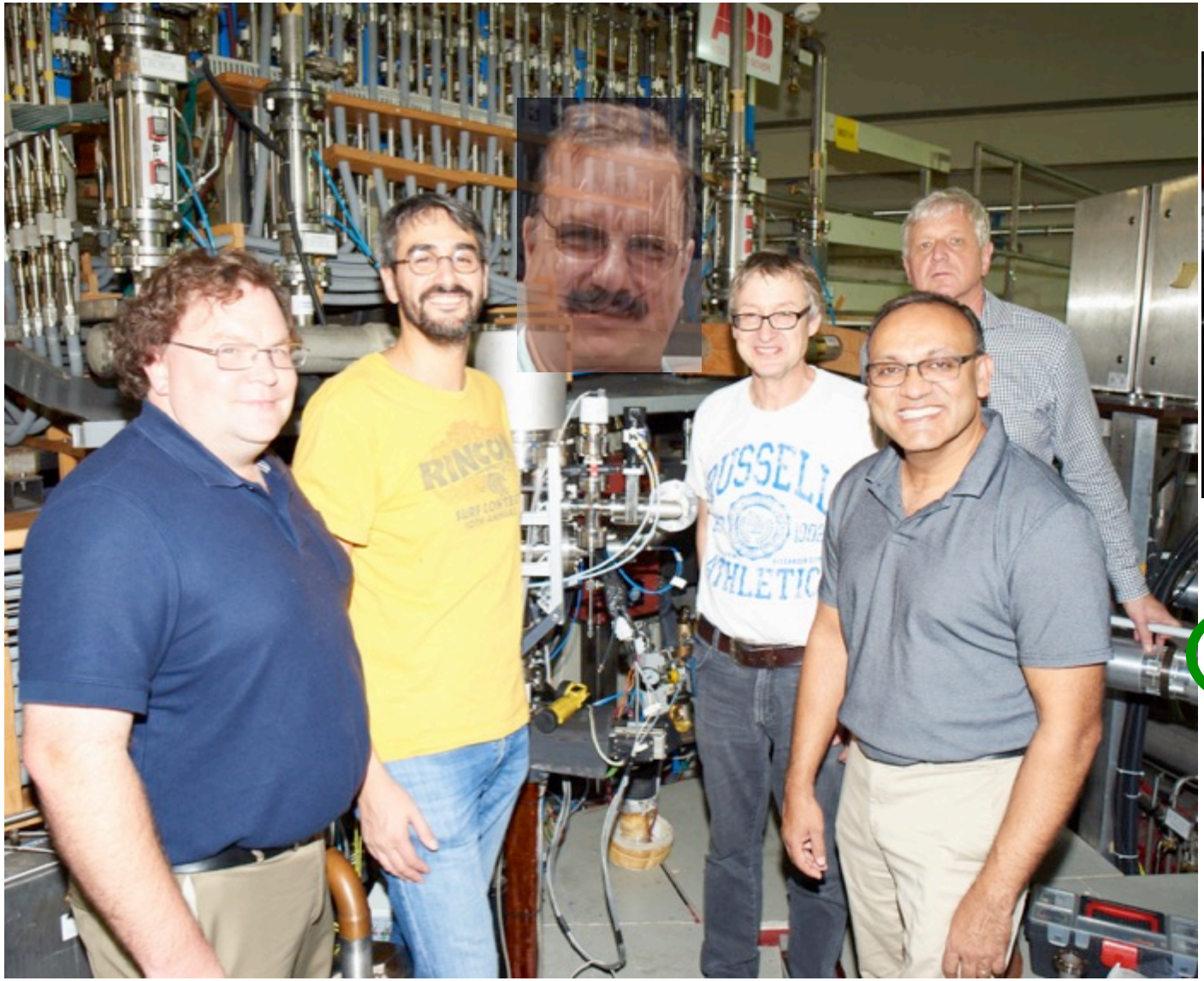

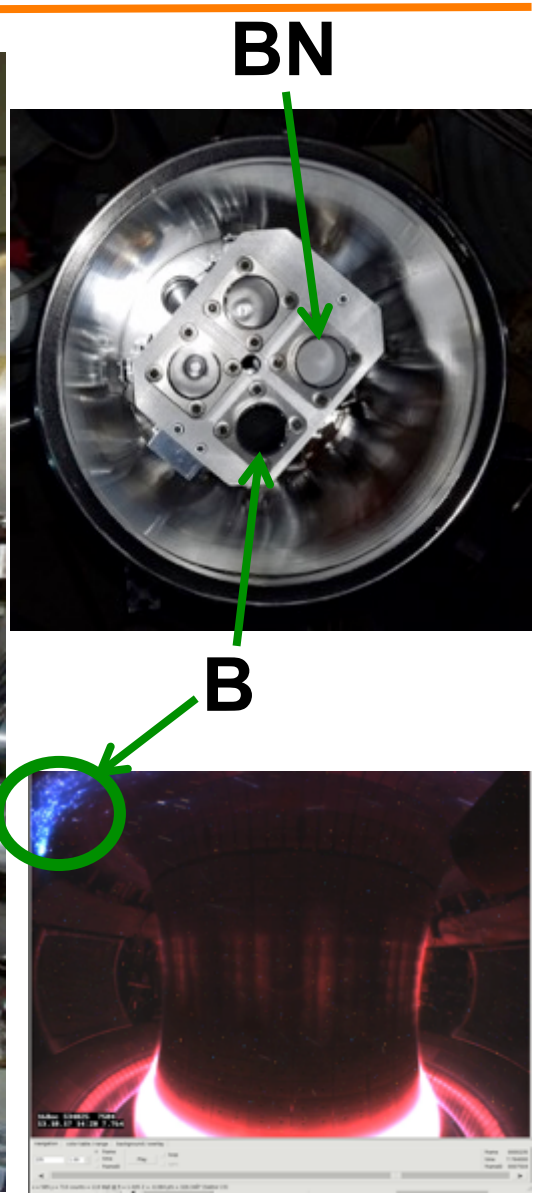

BN and B powder both successfully injected into auxiliary heated AUG plasmas

- **B**: into 10 MW NBI, 1.2 MW ECRH ELMy H-modes
  - Sequence: 1 or 2 conditioning discharges followed by a low density discharge (3 conditioning, 2 reference)
  - Observed increased B flux from limiters & divertor
  - Rates low: P_{rad} increased by 50% at highest rate
  - No obvious confinement improvement yet

- BN: into 10 MW NBI, 1.2 MW ECRH ELMy H-modes
  - Sequence: several conditioning discharges followed by a low density discharge (6 conditioning, 4 reference)
  - Observed increased B & N flux from limiters & divertor
  - P_{rad} increased by > 100% at highest rates
  - At high injection rates, confinement and stored energy increased by 20-30%, as observed with N2 puffing
  - Crashed if $\beta_N > 2.7$

B injection captured with visible camera; injection rate appears to vary in time, as B powder stuck together

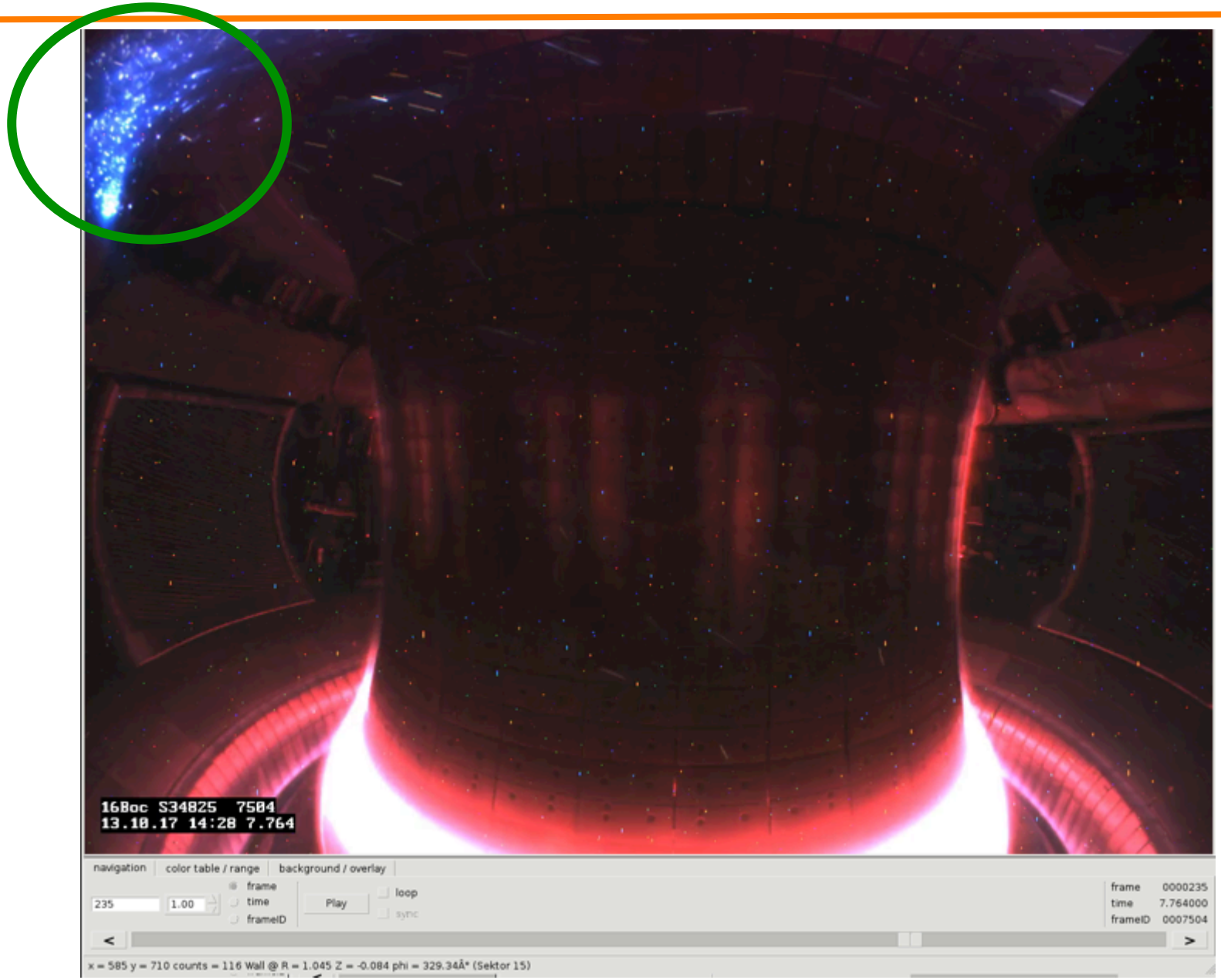

Pure B injection had modest effect on plasma for injection rates used

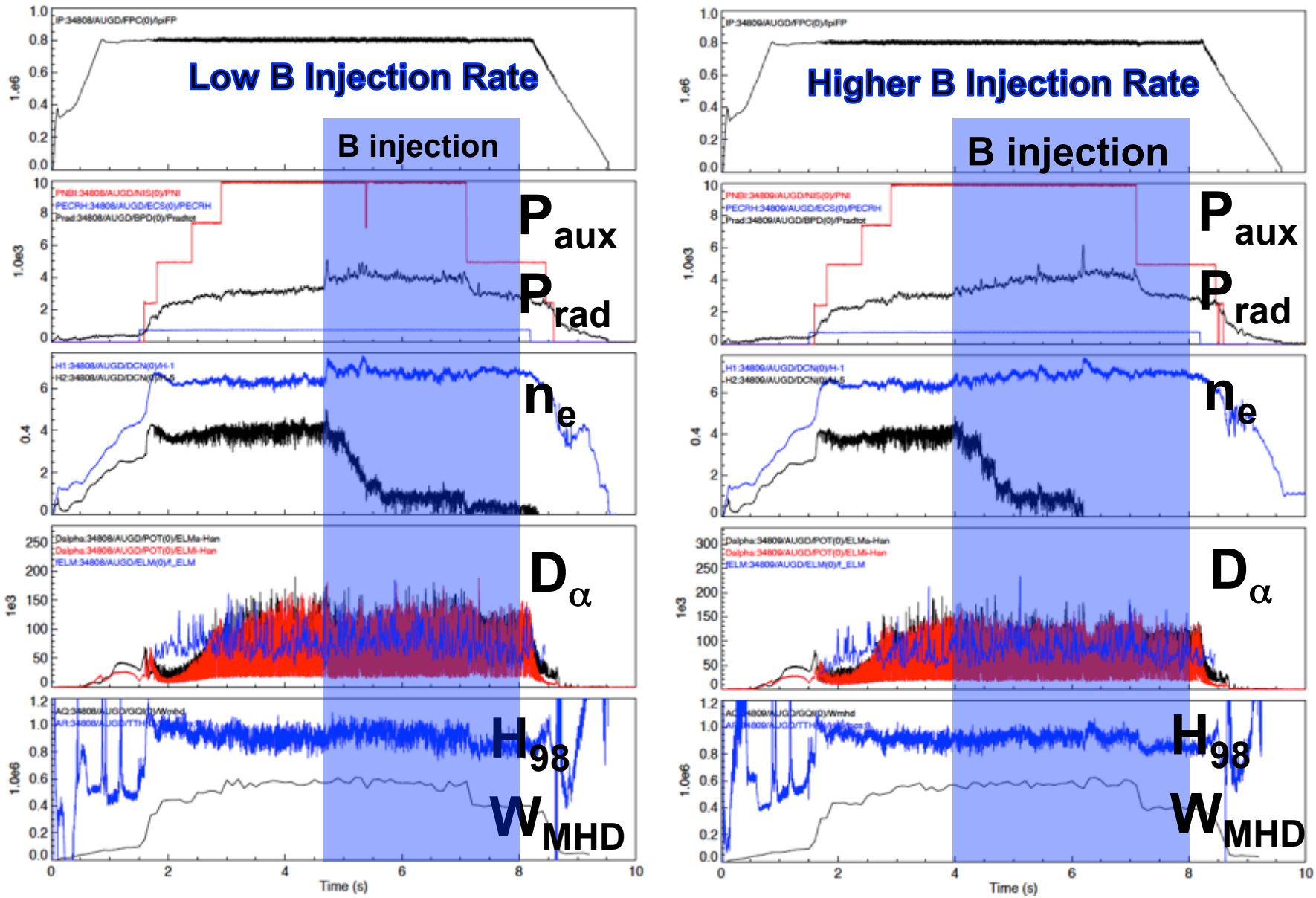

N and B emission from limiters and divertors elevated during B injection phase

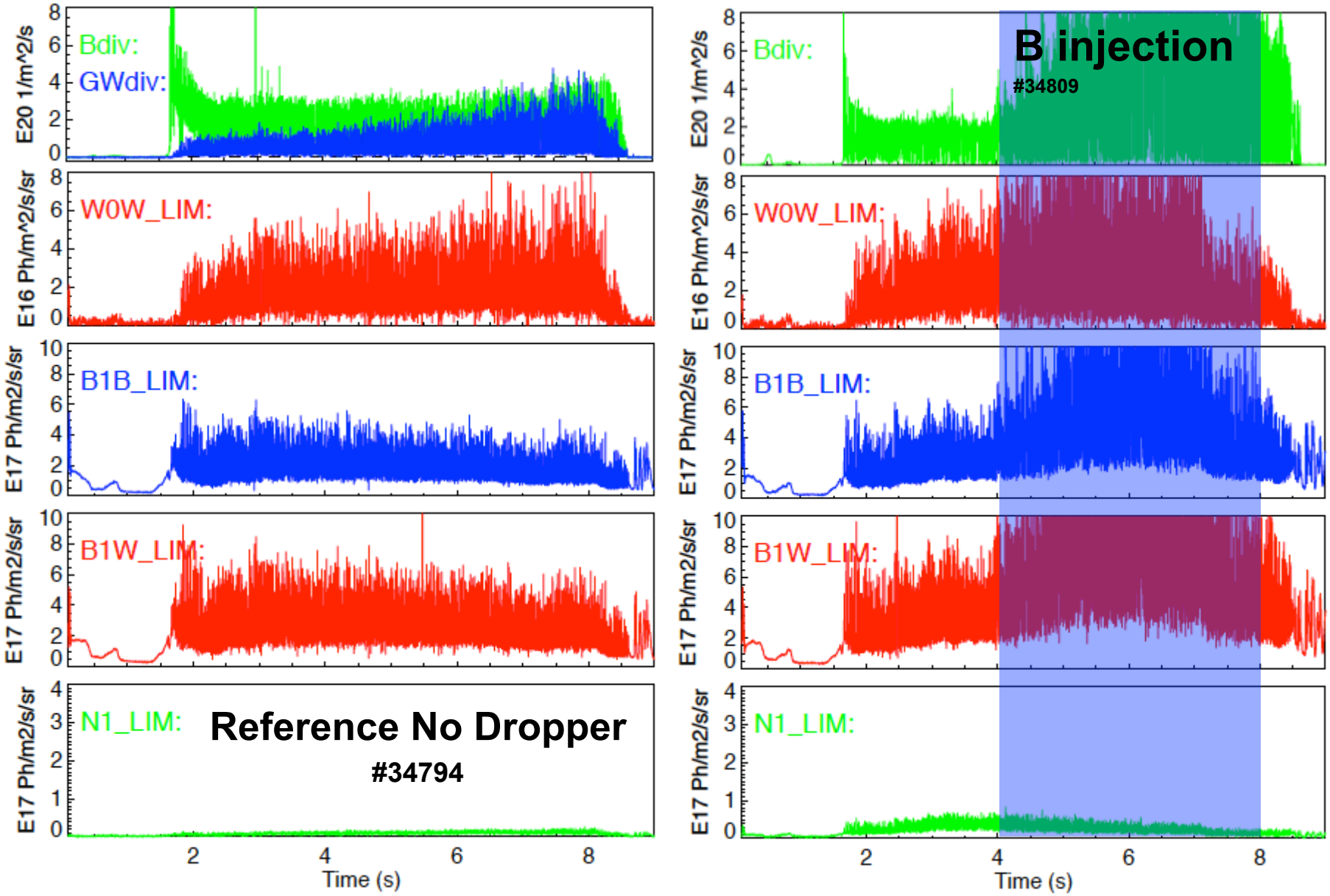

B emission intensity on CER increased with increasing B injection rates

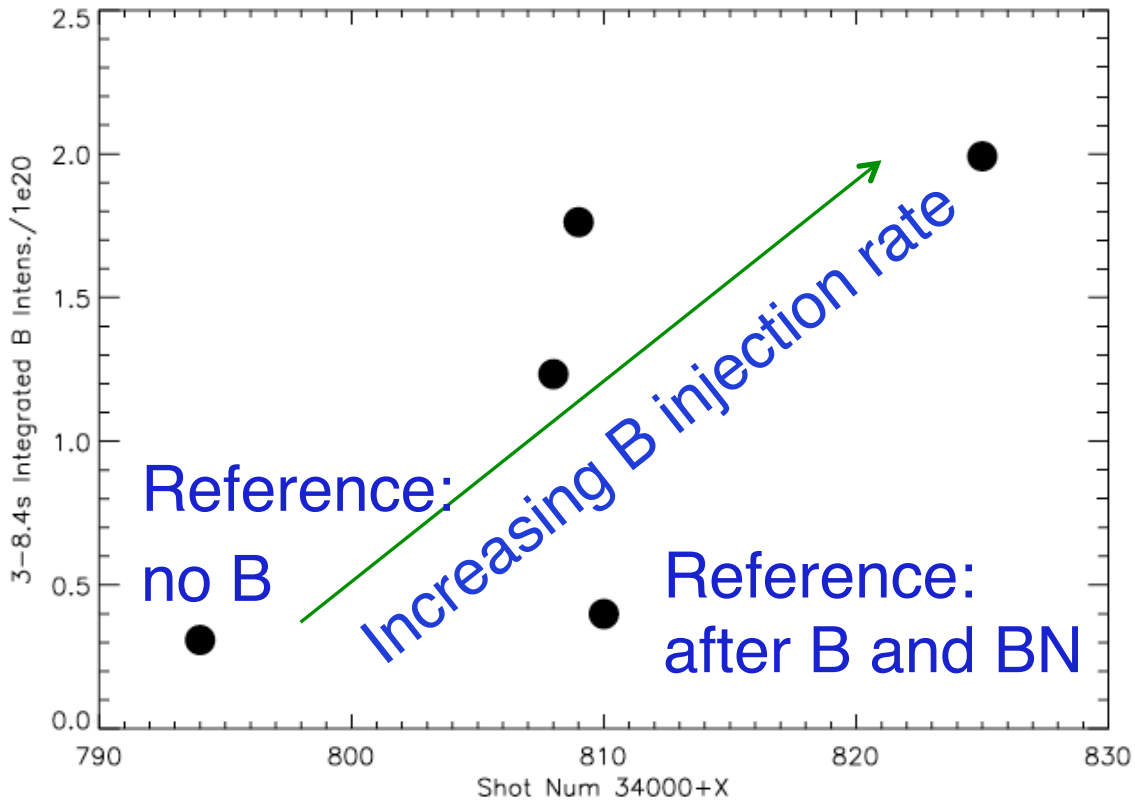

shot	Comment	Boron at
34793	VPE	
34794	no BN	
34795	BN	
34796	BN	3,7E+18
34797	test target	
34798	BN 2*	3,0E+19
34799	BN 2*	1,0E+20
34800	test target	
34801	BN 4 *	4,2E+20
34802	no BN	
34803	BN 4*	2,7E+20
34804	test target	
34808	Bor 3-7 s	8,3E+20
34809	Bor 3-7 s	4,2E+21
34810	test target	
38425	Bor 3-10s	9,2E+21
34826	elm suppression	
34827	elm suppression	
34829	elm suppression	

Bonus: ELM suppression with magnetic perturbations successfully achieved after B injection discharge

- Need to confirm that B injection was responsible

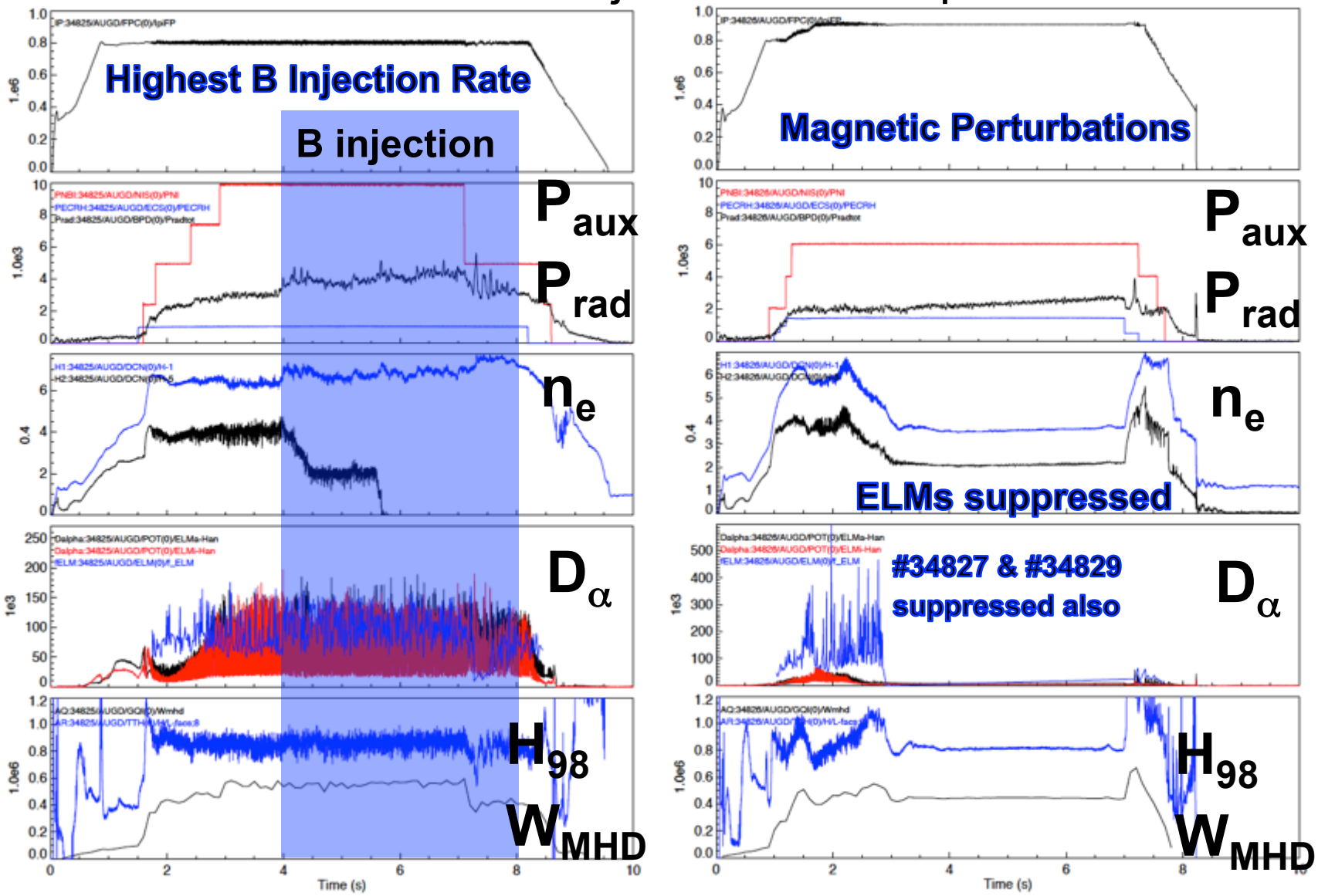

BN and B powder both successfully injected into auxiliary heated AUG plasmas

- B: into 10 MW NBI, 1.2 MW ECRH ELMy H-modes
  - Sequence: 1 or 2 conditioning discharges followed by a low density discharge (3 conditioning, 2 reference)
  - Observed increased B flux from limiters & divertor
  - Rates low: P_{rad} increased by 50% at highest rate
  - No obvious confinement improvement yet

- **BN**: into 10 MW NBI, 1.2 MW ECRH ELMy H-modes
  - Sequence: several conditioning discharges followed by a low density discharge (6 conditioning, 4 reference)
  - Observed increased B & N flux from limiters & divertor
  - P_{rad} increased by > 100% at highest rates
  - At high injection rates, confinement and stored energy increased by 20-30%, as observed with N2 puffing
  - Crashed if $\beta_N > 2.7$

BN injection captured with visible camera; relatively consistent injection rates in time

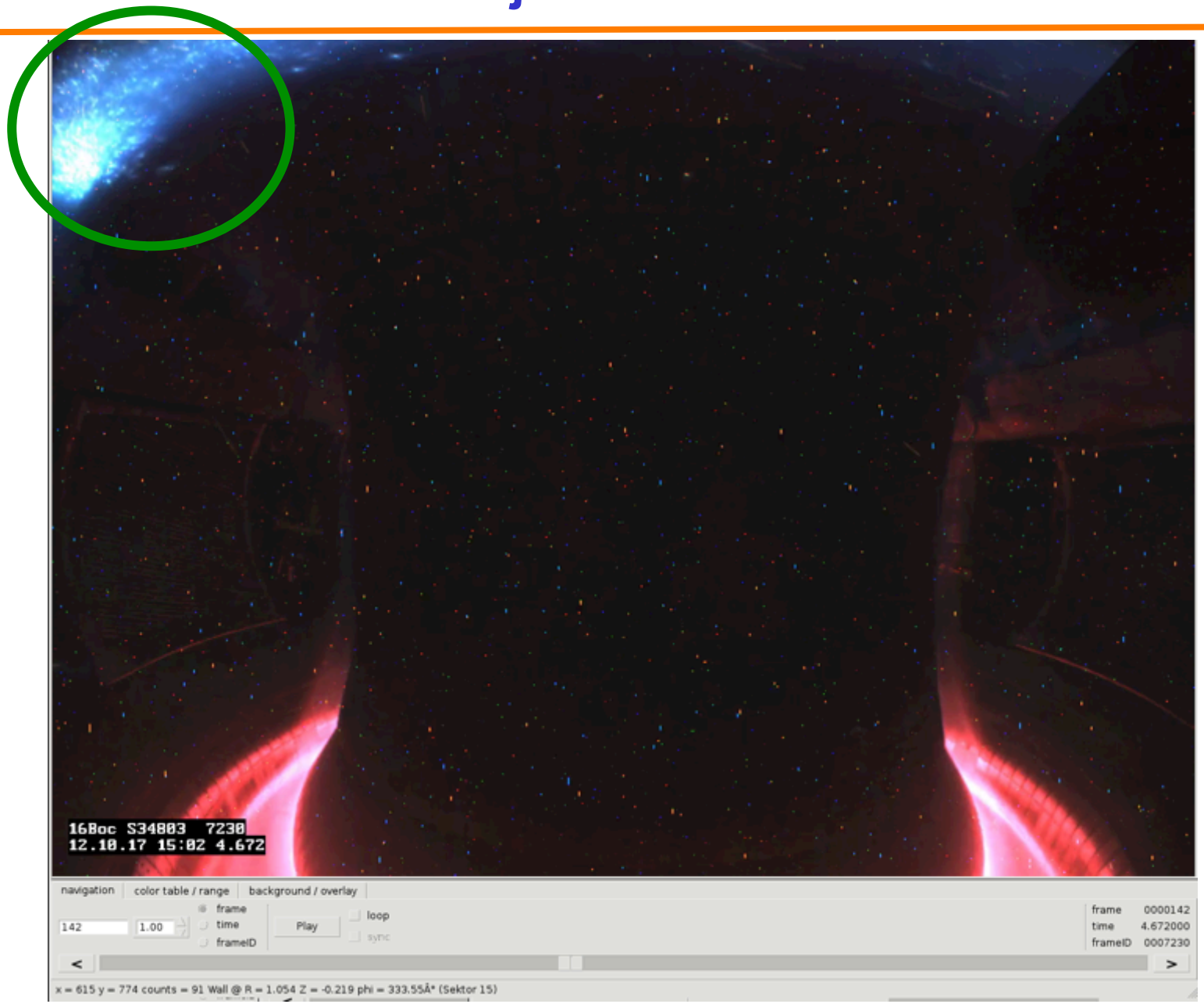

Radiated power and confinement increased modestly with increasing BN injection rate; crashed $\beta_N \geq 2.7$

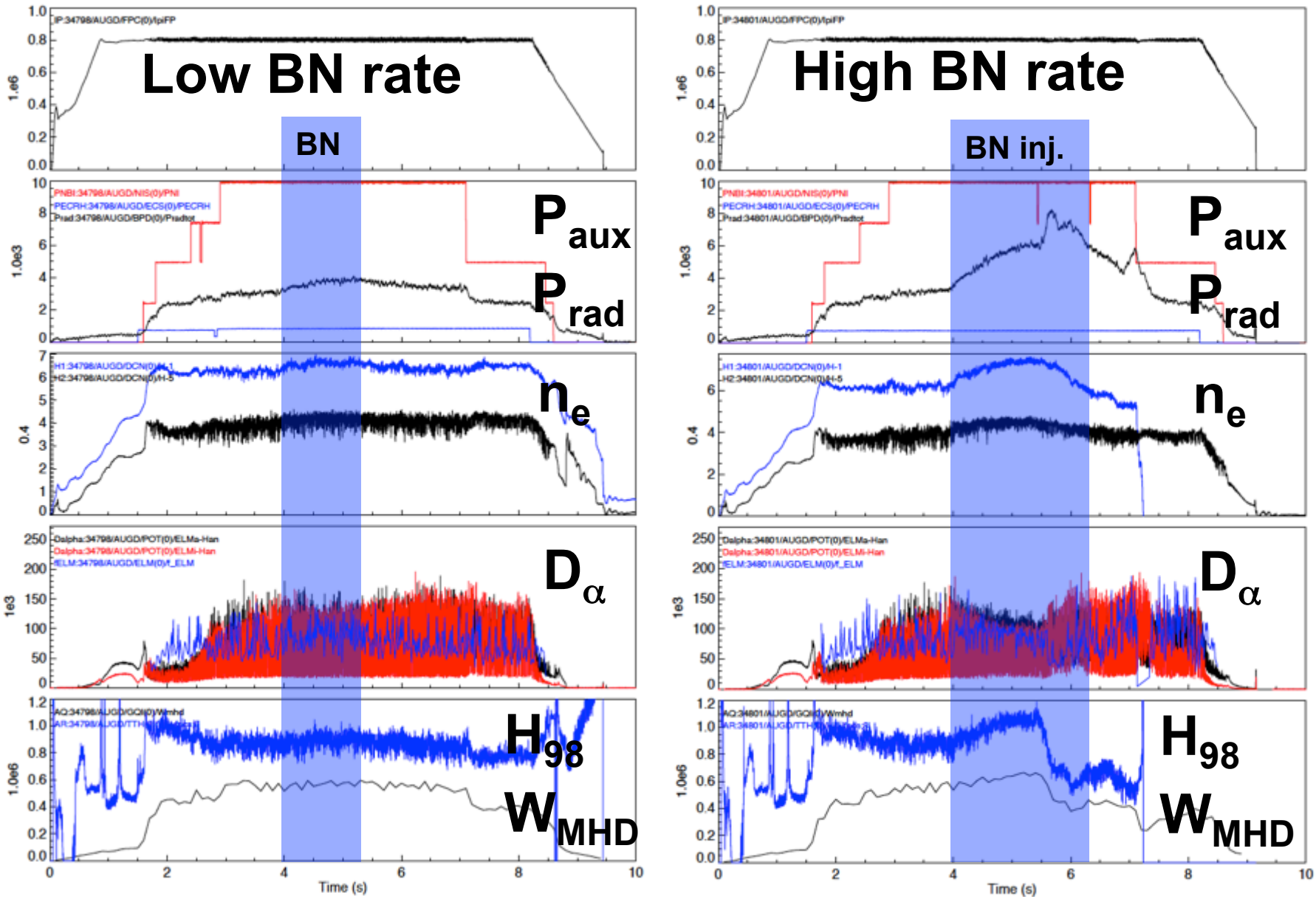

N and B emission from limiters and divertors elevated during BN injection phase

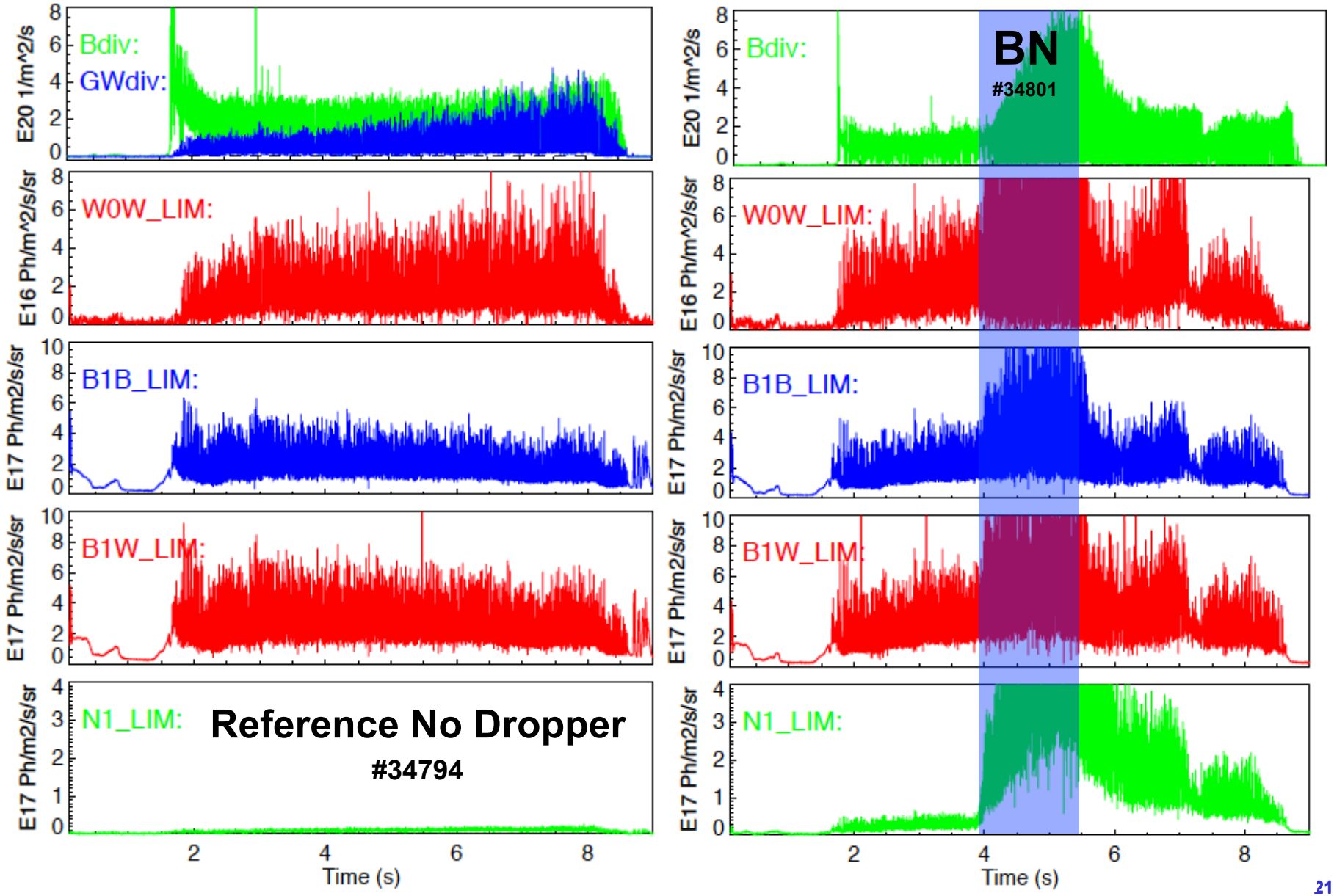

N emission intensity on CER increased with increasing BN injection rates

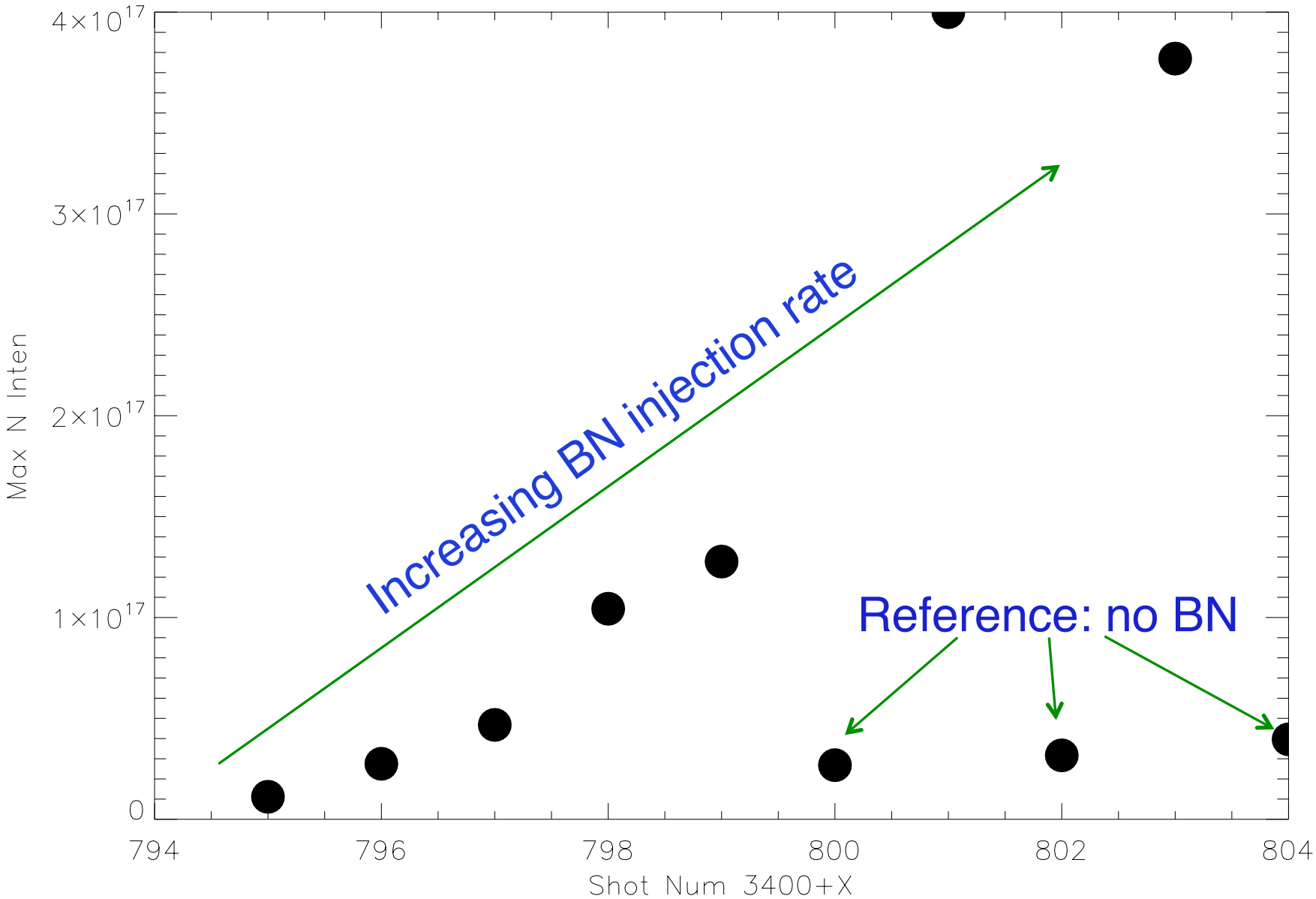

Several operational challenges were encountered but rapidly resolved

- Onboard diagnostics proved useful
- This particular issue: inter-shot test valve closed prematurely by solenoid
- Once we realized issue, solved by tying the valve open
- Permanent fix planned near term

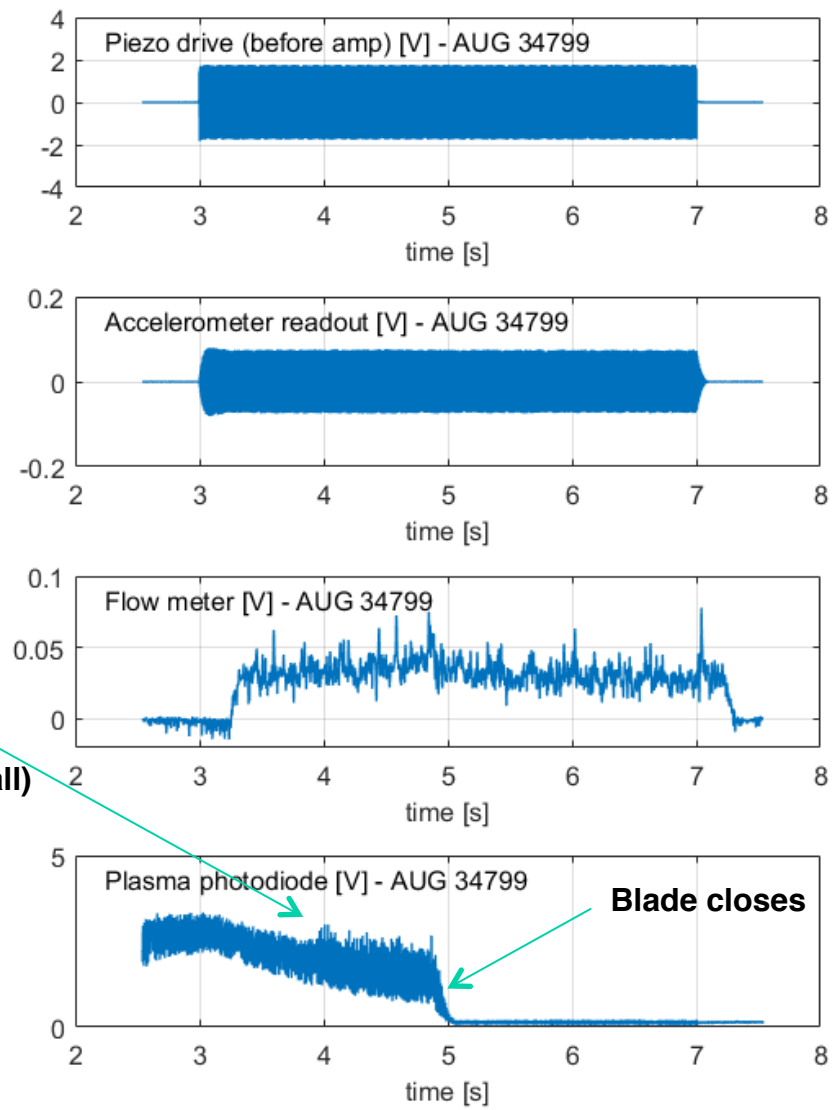

Summary: PPPL and IPP developed a strategic collaboration on impurity injection for wall conditioning with metal walls

- Dropper commissioned on 10/11/17
  - Dropper design developed by PPPL, in conjunction with AUG requirements
  - First experiments ran 10/12-10/13/17: 17 discharges
- Successful injection of BN and B powder into AUG H-modes
  - BN increases radiation and confinement
  - B may be better at conditioning; optimization needed
  - Results will be reported at PSI and IAEA

- Near term: implementation on DIII-D, EAST, W7-X; possibly KSTAR, JT-60SA, *evaluate for ITER with e.g. Be*

Backup

DIII-D physics goal #1: how are pedestal stability and transport modified with low-Z impurity injection?

- Pedestal physics: Science of impurity (externally) induced wide pedestals and impurity stimulated modes like the Bursty Chirping Mode (BCM)
  - can we stimulate turbulence to move off the KBM-limited pedestal to a wider, higher pedestal with lower gradients?

- Pedestal transport and structure as a function of injected Z: ion dilution vs. Z_{eff}
  - contributes directly to ITPA PEP-37 (effect of impurities on pedestal) with new aspect of pure B and pure C impurity injection

- Localized impurity injection to determine if pedestal impurity transport is neoclassical

Can low-z impurity injection be used to trigger wide, high pedestals?

- Kinetic ballooning mode (KBM) leads to narrow pedestals and modest pedestal height
  - Destabilizing a pedestal-local instability should allow access to higher pedestal pressure
- In DIII-D, Li powder injection destabilized bursty chirping mode
  - Pedestals wider and higher than predicted by EPED-like model
  - Similar mode observed in EAST
- Can BCM or other mode be triggered generally by low-Z impurities?

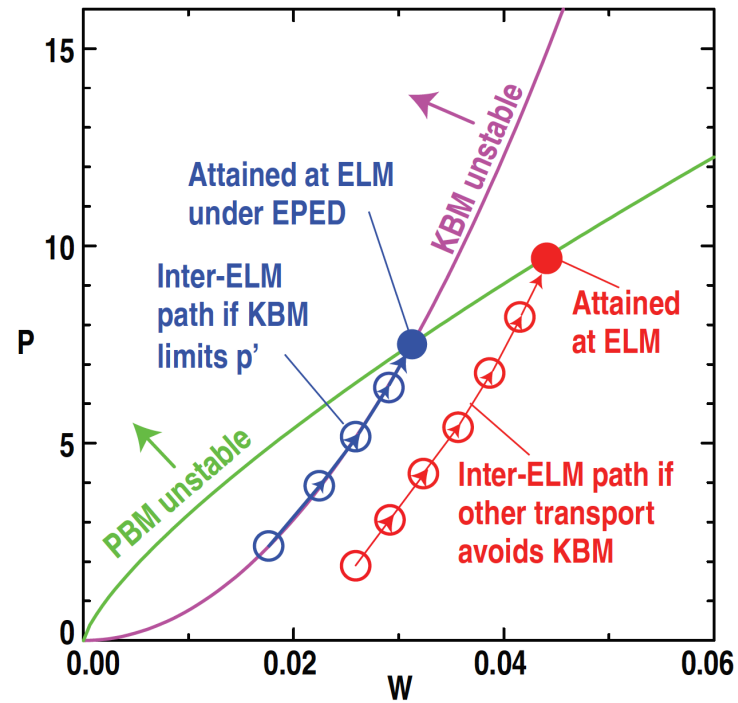

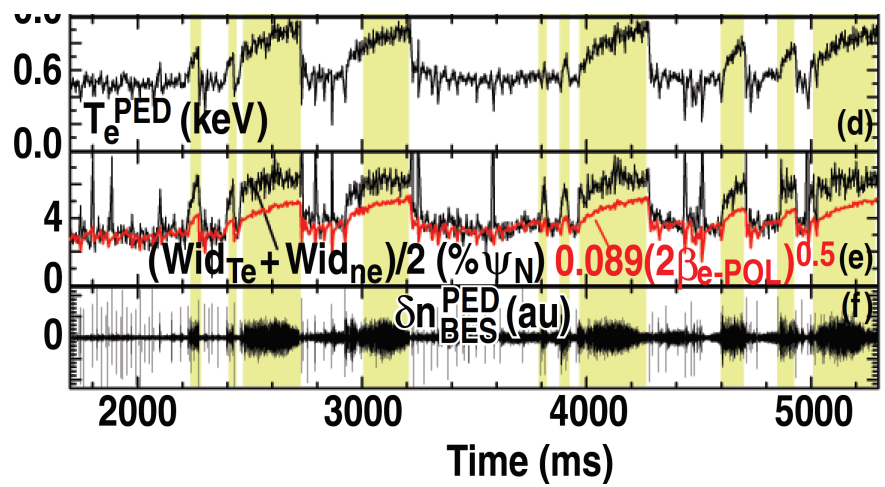

T.H. Osborne et al., Nucl. Fusion **55** (2015) 063018

We have the tools (kinetic equilibria with multiple impurities, ELITE) to interpret the results!

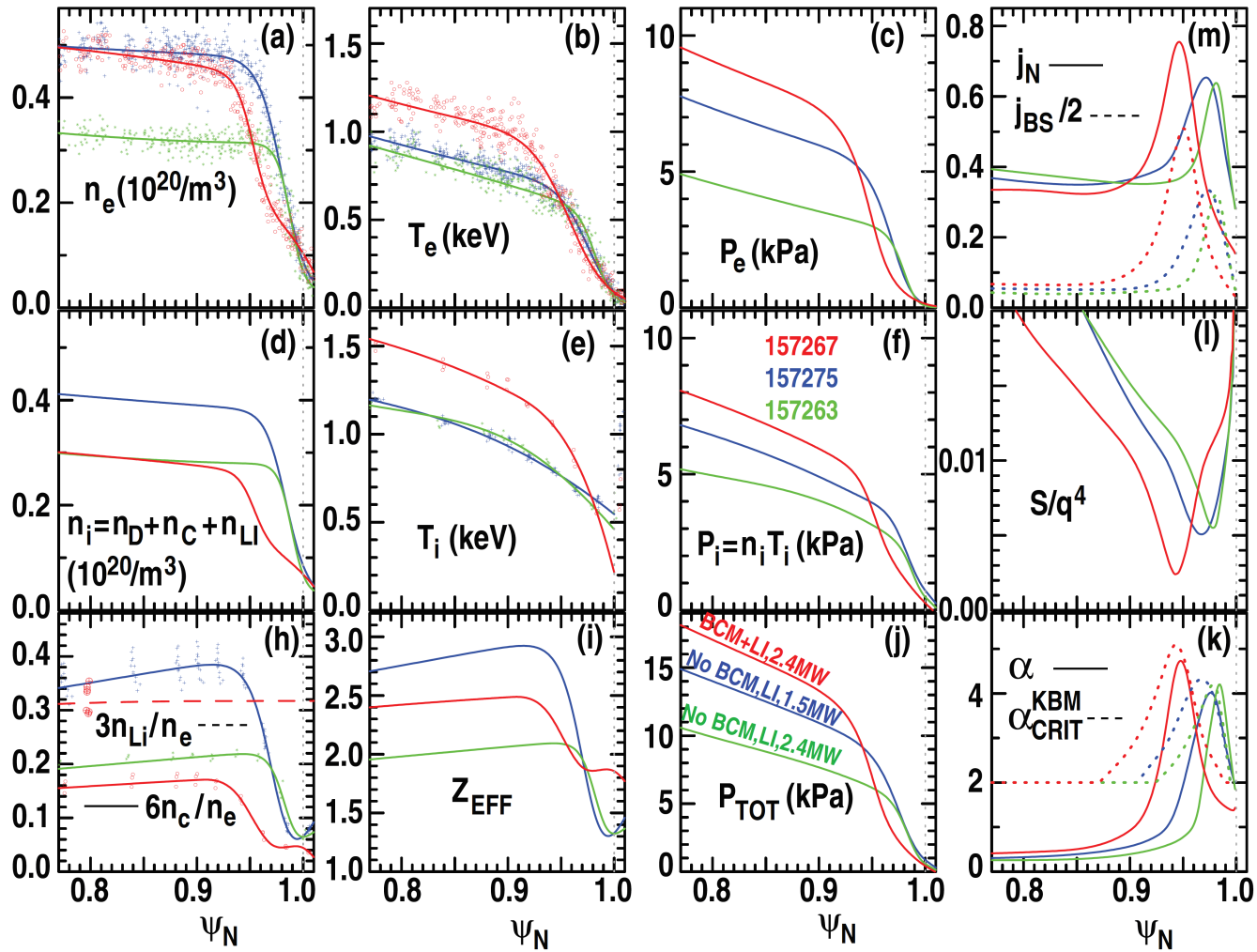

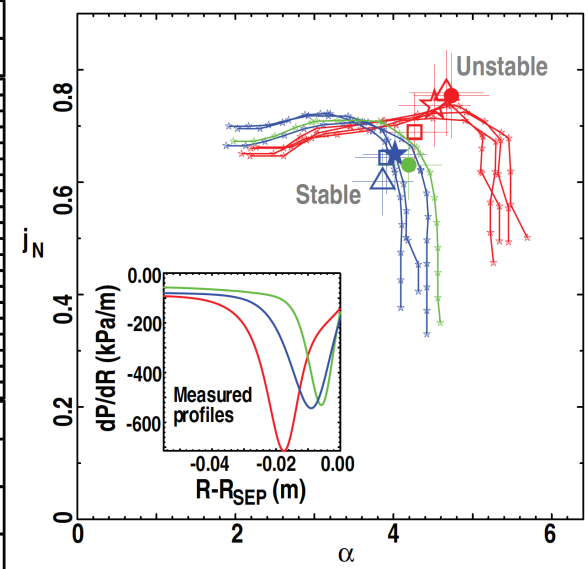

- Work toward predictive capability as we begin to understand wide pedestal physics

T.H. Osborne et al., Nucl. Fusion **55** (2015) 063018

DIII-D physics goal #2: can impurity injection be used for real time wall conditioning?

- Plasma assisted wall conditioning solutions: boronization, siliconization
  - can use pure B instead of B_2D_6 (no D loading, no explosive hazard)
  - Can evaluate Si injection for coatings to compare with SiD4

- Material migration & test of new materials, e.g. SiC, in tokamak environment
  - possible use of isotopically enriched powder as tracers (work with ORNL for isotopes and D. Donovan for analysis)

- Bonus: Trace impurity transport (strike-point to SOL) using single granule injection
  - impact on impurity sources/recycling; contribute to impurity transport milestone #205 in 2019

DIII-D physics goal #3: can radiative divertor be enhanced with solid material injection?
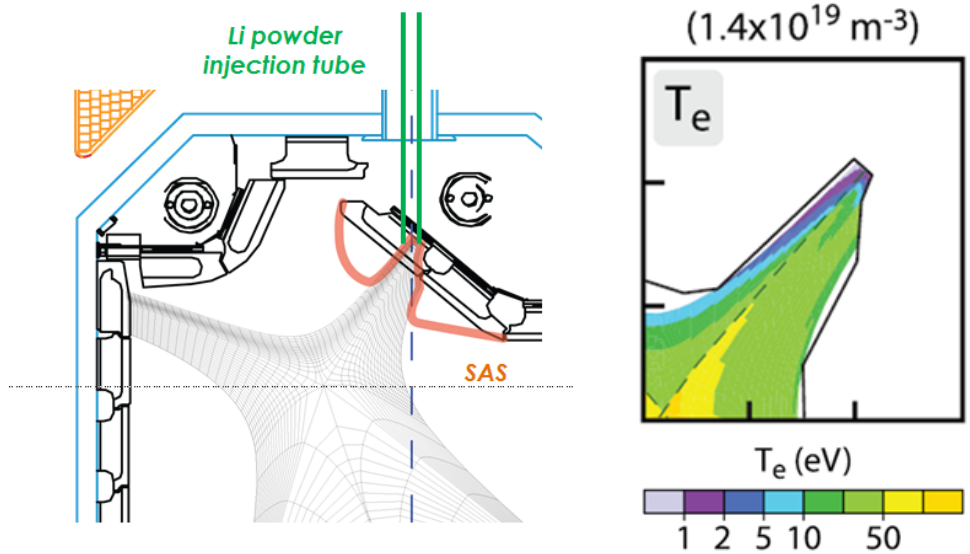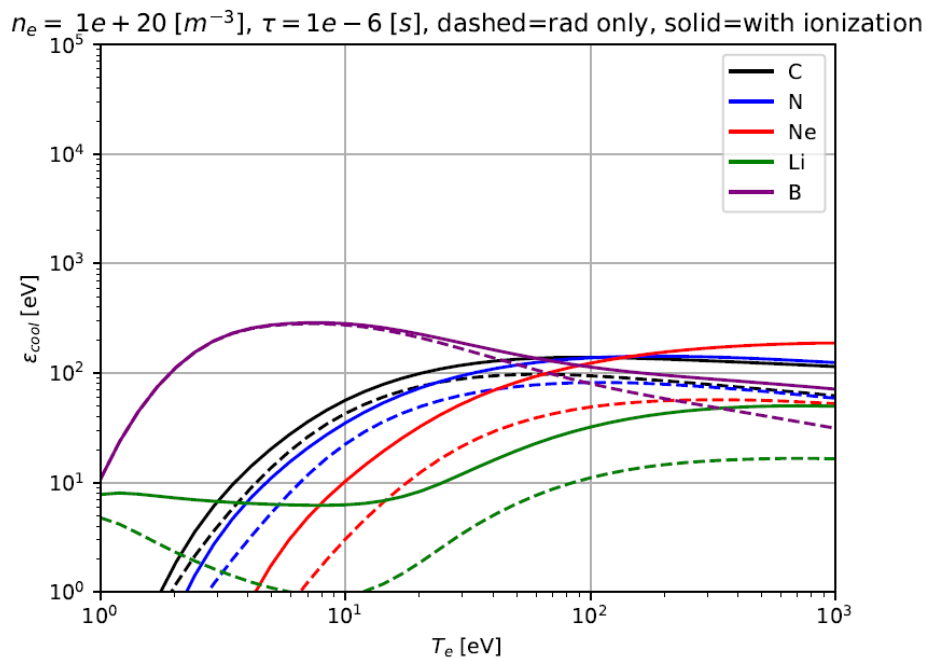
- Impurity effects on detachment, including SAS closed divertor
  - Study radiative divertor with different radiators
  - Eventually develop feedback control
- NSTX-U campaign on DIII-D (carryover from FY 2017) injects multiple impurities into SAS slot
  - Test B, Li, BN, C
- Mixed powders for radiating simultaneously in the div (low-Z) and edge (med-Z)